

A-excellent B- good C-ordinary X-bad

| name | natural rubber | Styrene Butadiene | Nitrile Butadiene Rubber | Ethylene-Propylene-Diene Monomer | Silica | Fluororubber | Polyurethane |
|---|---|---|---|---|---|---|---|
| code | NR | SBR | NBR | EPDM | Si | FKM | PU |
| min ºC | -75 | -55 | -40 | -55 | -110 | -30 | -30 |
| max ºC | 70 | 70 | 100 | 125 | 225 | 250 | 100 |
| hard(shore A) | 30~90 | 40~90 | 40~90 | 40~90 | 40~80 | 55~90 | 50~80 |
| tensile(kgf/cm2)max | 35 | 25 | 25 | 20 | 15 | 20 | 20 |
| mineral oil | X | X | A | X | B | A | A |
| sulfuric acid | C | C | C | A | X | A | C |
| toluene | X | X | X | X | X | A | A |
| alcohol | B | B | A | A | X | A | X |
| Ether | X | X | C | X | X | X | C |


**CHISUN VALVE CO.,LTD.**

Address: No.8 Xingyu Road Airport New District, Wenzhou,China

Web:www.chisunvalve.com










# 2024 | PRODUCT SELECTION MANUAL

CHISUN VALVE CO.,LTD







# COMPANY PROFILE

The company has the ability of valve development, design and full performance testing. The rich strength、excellent manufacturing equipment、perfect testing process、complete production series and reasonable price make the company deeply gained trust and praise from customers. We have design center, research and development center, production CNC machining center and testing center. In addition, the company is equipped with modern and advanced equipment such as high pressure 42.0MPA water cutting machine, 12000W laser cutting machine, line length 290 meters electrostatic spraying line, valve assembly line, to ensure the physical and chemical properties and surface accuracy of the main parts of the company's products, to ensure superior product performance, so that Chisun company's excellence production process maintains a far ahead of the level in the same industries zone.



At present, the company's products have been widely used in domestic large-scale projects (sewage treatment, chemical, power plant, paper making, mining, food, all kinds of slurry, etc.), the company has the right to import and export, products which have been exported to Russia, the United States, Australia, Europe, Southeast Asia and other countries.  Products comply with GB national standard, API American Petroleum Institute standard, MSS-SP-81 American Valve and Pipe Parts Industry Manufacturers Standardization Association standard, JIS Japanese national standard, DIN German national standard.

The company firmly believes that quality is the survival of the enterprise, is the fundamental strength to win the competition. With the purpose of "no quality, how to win", The company adheres to its principles of honest and trustworthy, pioneering and innovative, enthusiastic service, and strive finally to create "CHISUN" brand. And the slogan "open source and reduce expenditure with Chisun", showed the quality and service commitment to majority of users.  Chisun will continue to develop new products to expand new fields, dedicated to providing customers at home and abroad with higher quality of modern industrial valves.





# PRODUCTION EQUIPMENT

***The cutting-edge machining equipment***
***Accomplishes excellent product quality.***

Advanced production equipment, sophisticated assembly line production,
fully show the quality














# ENTERPRISE QUALIFICATION

## *Strength Creates Brilliance*

We have been using the world's advanced quality management system to ensure product quality in line with the international valve industry standards






















































# DEVELOPMENT HISTORY

*Ride The Wind And Waves*
*Open Up The Future*

## 2002 Company established

Chisun Valve Co., Ltd established in 2002, it's used to be Chisun Valve Manufacturing Co., Ltd,which specialized in the production of knife gate valves

## 2006 The nascent years of Chisun

The frictionless area metal knife gate valve produced by the company has completed the scientific and technological achievement appraisal and won the high-tech product certificate of Zhejiang Province

## 2008 Strategy to start

The frictionless area metal seal knife gate valve produced by the company has won the national key new product certificate

## 2017 Have some achievement

The company (CHISUN)registered the European Union trademark

## 2019 Moving on steadily

The company introduced high power laser cutting equipment, further improve the knife gate valve product capacity and product manufacturing process

## 2020 Innovating constantly

The company (CHISUN)registered the American trademark

## 2021 Build up the future

The company changed its name to Chisun Valve Co., LTD., no regional company name not only reflects the strength of the company, but also provides convenience for long-term development of the company

## 2022 Create new brilliance

The company's Phase II and Phase III projects were launched,lined with polyurethane type of knife gate valve patent industrialization.

## QB Series Unidirectional seal Knife Gate Valve



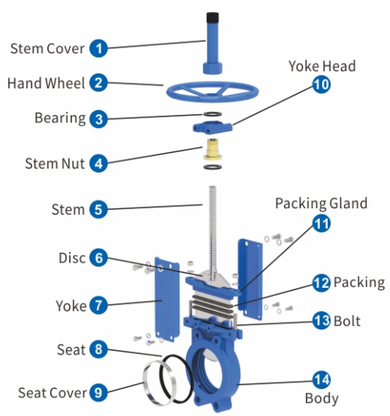


**Model:** QBZ73X

**Working Pressure:**

| | | | |
|---|---|---|---|
| DN50-DN100 | 16bar | DN650-DN750 | 4bar |
| DN125-DN200 | 10bar | DN800-DN900 | 3bar |
| DN250-DN400 | 7bar | DN1000 | 2bar |
| DN450-DN600 | 5bar | DN1100-DN1400 | 1bar |

**Type:** Wafer, Lug
**Design Standard:** MSS SP-81
**Flange Standard:** DIN PN10,PN16,150LB ,JIS 10K,TABLE E/D
**Face to Face:** MSS SP-81
**Testing Standard:** API-598
**Operation:** manual, electric, pneumatic, hydraulic, sprocket, electro-hydraulic, gear ,lever
**Main material:** F55, F53, 2205, CF3M, CF8M, CF8, WCB, GGG40
**Disc material:** F55, F53, 2205, SS310, SS316L, SS316, SS304
**Sealing material:** NBR, EPDM, PTFE, FKM, Graphite, Metal
**Packing:** Aramid fiber, high-water based fiber, rubber, PTFE, graphite
**Applicable medium:** for pulp, cement slurry, gold ore powder,coal slurry, pulp, chemical treatment of sewage, sedimentation tanks, asphalt,acid and other liquids and other media.

## QV Series Unidirectional seal Knife Gate Valve



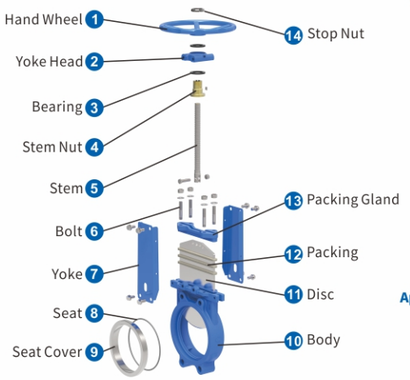


**Model:** QVZ73X

**Working Pressure:**

| | |
|---|---|
| DN50-DN100 | 16bar |
| DN125-DN200 | 10bar |
| DN250-DN400 | 7bar |

**Type:** Wafer,Lug
**Design Standard:** MSS SP-81
**Flange Standard:** DIN PN10,PN16,150LB, JIS 10K, TABLE E/D
**Face to Face:** MSS SP-81
**Testing Standard:** API-598
**Operation:** handwheel, electric, pneumatic, hydraulic, sprocket, electro-hydraulic, gear, lever
**Main material:** F55, F53, 2205, CF3M, CF8M, CF8, WCB, GGG40
**Disc material:** F55, F53, 2205, SS310, SS316L, SS316, SS304
**Sealing material:** NBR, EPDM, PTFE, FKM, Graphite
**Packing:** Aramid fiber, high-water based fiber, rubber, PTFE, graphite
**Applicable medium:** Applicable for coal in power plant, slag discharge, sewage treatment, food, paper making, medicine, petroleum and chemical industry, water, Oil,steam, connecting or cutting grout, gold powder, ores, slag, coal, pulp, wood pulp, tailings, fibers, dust, chemicals, sewage treatment, sedimentation tanks, asphalt, bunker export, fruit juices, cereals, slaughter plant waste and other media. Epecially used for mining in electricity plant





## QD Series Unidirectional seal Knife Gate Valve Slag disposal

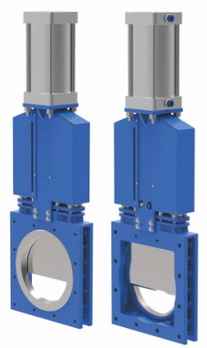

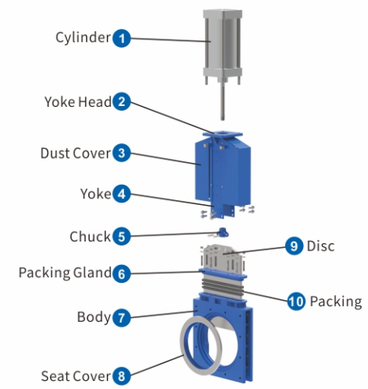


**Model:** QDZ43X

**Working Pressure:**

| | |
|---|---|
| DN150-DN200 | 10bar |
| DN250-DN400 | 7bar |
| DN450-DN550 | 5bar |
| DN600-DN700 | 3bar |

**Type:** Flange
**Design Standard:** MSS SP-81
**Flange Standard:** PN10/PN16 150LB 10K TE TD
**Face to Face:** MSS SP-81
**Testing Standard:** API-598
**Operation:** handwheel,electric,pneumatic,hydraulic,sprocket,electro-hydraulic, gear, lever
**Main material:** F55, F53, 2205, CF3M, CF8M, CF8, WCB, GGG40
**Disc material:** F55, F53, 2205, SS310, SS316L, SS316, SS304
**Sealing material:** NBR, EPDM, PTFE, FKM, Graphite, Metal
**Packing:** Aramid fiber, high-water based fiber, rubber, PTFE, graphite
**Applicable medium:** Applicable for Dust,Solid Particles,Coal, oil, chemical and so on.Slag, cinder, dislagging recommend.

## QYA Series Unidirectional seal encolosed Knife Gate Valve



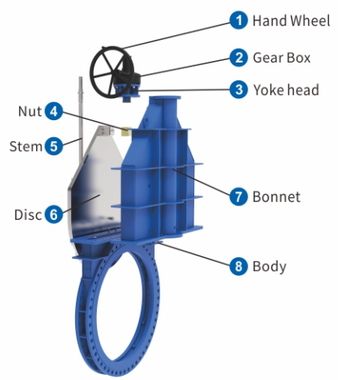


**Model:** QYAZ73X

**Working Pressure:**

| | | | |
|---|---|---|---|
| DN50-DN100 | 16bar | DN650-DN750 | 4bar |
| DN125-DN200 | 10bar | DN800-DN900 | 3bar |
| DN250-DN400 | 7bar | DN1000 | 2bar |
| DN450-DN600 | 5bar | DN1100-DN1400 | 2bar |

**Type:** Wafer,Flange
**Design Standard:** MSS SP-81
**Flange Standard:** DIN PN10,PN16,150LB ,JIS 10K, TABLE E/D
**Face to Face:** MSS SP-81
**Testing Standard:** API-598
**Operation:** handwheel,electric,pneumatic,hydraulic,sprocket,electro-hydraulic, gear
**Main material:** F55,F53,2205,CF3M,CF8M,CF8,WCB,GGG40
**Disc material:** F55,F53,2205,SS310,SS316L,SS316,SS304
**Sealing material:** EPDM,FKM,NBR,PTFE
**Packing:** Aramid fiber,high-water-based rubber packing graphite wheel
**Applicable medium:** Applicable for coal in power plant, slag discharge, sewage treatment, food, paper making, medicine,petroleum and chemical industry, water, Oil, steam, connecting or cutting grout, gold powder, ores, slag, coal, pulp, wood pulp, tailings, fibers, dust, chemicals, sewage treatment, sedimentation tanks, asphalt, bunker export, cereals, slaughter plant waste and other media.

## QY Series Unidirectional seal Knife Gate Valve

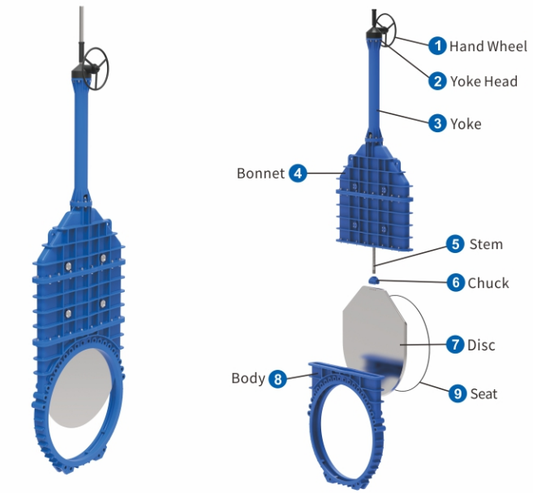


**Model:** QYZ73X
**Working Pressure:** DN50-DN100 16bar; DN125-DN200 10bar; DN250-DN400 7bar; DN450-DN600 5bar; DN650-DN750 4bar; DN800-DN900 3bar; DN1000 2bar; DN1100-DN1400 2bar
**Type:** Wafer,Lug,Flange
**Design Standard:** MSS SP-81
**Flange Standard:** DIN PN10,PN16,150LB ,JIS 10K, TABLE E/D
**Face to Face:** MSS SP-81
**Testing Standard:** API-598
**Operation:** handwheel,electric,pneumatic,hydraulic,sprocket,electro-hydraulic, gear
**Main material:** F55,F53,2205,CF3M,CF8M,CF8,WCB,GGG40
**Disc material:** F55,F53,2205,SS310,SS316L,SS316,SS304
**Sealing material:** EPDM,FKM,NBR,PTFE
**Packing:** high-water-based rubber packing graphite wheel
**Applicable medium:** Applicable for coal in power plant, slag discharge, sewage treatment, food, paper making, medicine, petroleum and chemical industry, water, Oil, steam, connecting or cutting grout, gold powder, ores, slag, coal, pulp, wood pulp, tailings, fibers, dust, chemicals, sewage treatment, sedimentation tanks, asphalt, bunker export, cereals, slaughter plant waste and other media.

## QH Series Unidirectional Sealing Knife Gate Valve

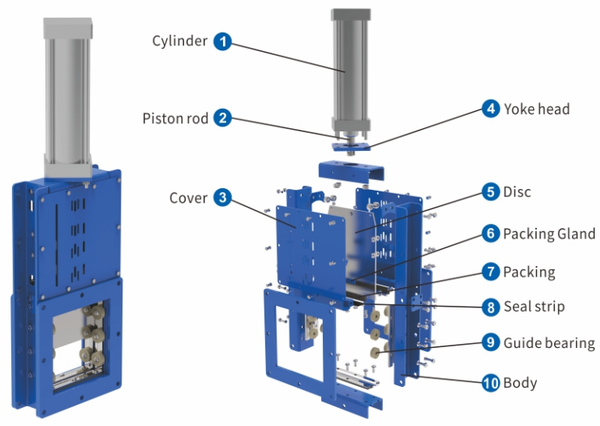


**Model:** QHZ43X
**Type:** SquareFlange
**Flange Standard:** custom against client' s requirement.
**Face to Face:** MSS SP-81
**Testing Standard:** API-598
**Operation:** handwheel, electric, pneumatic, hydraulic, sprocket, electro-hydraulic, gear, lever
**Main material:** Q235,Stainless steel
**Disc material:** F55,F53,2205,SS310,SS316L,SS316,SS304
**Sealing material:** NBR,FKM,graphite,Metal to Metal,EPDM, Graphite
**Packing:** Aramid fiber, high-water based fiber, rubber, PTFE, graphite
**Applicable medium:** Applicable for Urban sewage treatment, sugar, powder, medicine, chemical and other fields.





## QVY Series Unidirectional seal Knife Gate Valve

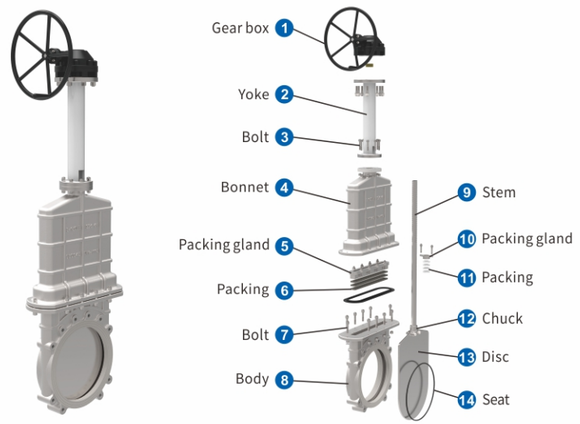


**Model:** QVYZ73X
**Working Pressure:** DN100-DN2000 25bar; DN2200-DN3000 16bar
**Type:** Wafer,Lug,Flange
**Design Standard:** MSS SP-81
**Flange Standard:** DIN PN10,PN16,150LB ,JIS 10K,TABLE E/D
**Face to Face:** MSS SP-81
**Testing Standard:** API-598
**Operation:** handwheel, electric, pneumatic, hydraulic, sprocket, electro-hydraulic, gear
**Main material:** F55,F53,2205,SS310,CF3M,CF3,CF8M,CF8 WCB, GGG40
**Disc material:** F55, F53,2205, SS310, SS316L,SS316, SS304
**Sealing material:** EPDM,FKM,NBR,PTFE
**Packing:** Aramid fiber, high-water based fiber, rubber, PTFE
**Applicable medium:** Applicable for coal in power plant, slag discharge, sewage treatment, food, paper making, medicine, petroleum and chemical industry, water, Oil, steam, connecting or cutting grout, gold powder, ores, slag, coal, pulp, wood pulp, tailings,fibers, dust, chemicals, sewage treatment, sedimentation tanks, asphalt, bunker export, cereals, slaughter plant waste and other media.

## QP Series Bi-directional seal Polyurethane lined Knife Gate Valve

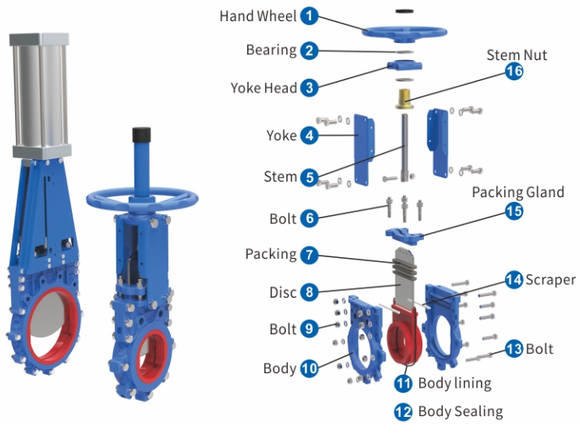


**Model:** QPZ73X
**Working Pressure:** DN50-DN200 16bar; DN250-DN600 10bar; DN650-DN700 8bar
**Type:** Wafer
**Design Standard:** MSS SP-81
**Flange Standard:** DIN PN10,PN16,150LB ,JIS10K, TABLE E/D
**Face to Face:** MSS SP-81
**Testing Standard:** API-598
**Operation:** handwheel, electric, pneumatic, hydraulic, sprocket, electro-hydraulic, gear box, lever
**Main material:** F55, F53, 2205, CF3M, CF8M, CF8, WCB, GGG40
**Disc material:** F55, F53, 2205, SS310, SS316L, SS316, SS304
**Sealing material:** Polyurethane
**Packing:** Aramid fiber, high-water based fiber, rubber, PTFE, graphite
**Applicable medium:** Applicable for coal in power plant, slag discharge, sewage treatment, food, paper making, medicine, petroleum and chemical industry, water, Oil, steam, connecting or cutting grout, gold powder, ores, slag, coal, pulp, wood pulp, tailings,fibers, dust, chemicals, sewage treatment, sedimentation tanks, asphalt, bunker export, cereals, slaughter plant waste and other media.

## QJ Series Bi-directional seal Rubber Lining Knife Gate Valve



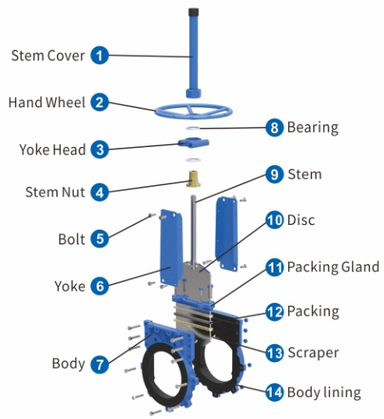


**Model:** QJZ73X
**Working Pressure:** DN50-DN200 16bar
DN250-DN400 10bar
**Type:** Wafer
**Design Standard:** MSS SP-81
**Flange Standard:** DIN PN10,PN16,150LB ,JIS 10K, TABLE E/D
**Face to Face:** MSS SP-81
**Testing Standard:** API-598
**Operation:** handwheel, electric, pneumatic, hydraulic, sprocket, electro-hydraulic, gear, lever
**Main material:** F55, F53, 2205, CF3M, CF8M, CF8, WCB, GGG40
**Disc material:** F55, F53, 2205, SS310, SS316L, SS316, SS304
**Sealing material:** NBR, EPDM, FKM, PU
**Packing:** Aramid fiber, high-water based fiber, rubber, PTFE
**Applicable medium:** Applicable for coal in power plant, slag discharge, sewage treatment, food, paper making, medicine, petroleum and chemical industry, water, Oil, steam, connecting or cutting grout, gold powder, ores, slag, coal, pulp, wood pulp, tailings, fibers, dust, chemicals, sewage treatment, sedimentation tanks, asphalt, bunker export, cereals, slaughter plant waste and other media.

## QM Series Bi-directional seal Knife Gate Valve



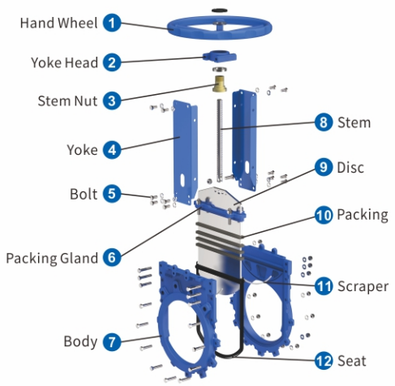


**Model:** QMZ73X
**Working Pressure:** DN50-DN200 16bar
DN250-DN600 10bar
DN650-DN700 8bar
DN750-DN1000 6bar
DN1200-DN2000 4bar
**Type:** Wafer
**Design Standard:** MSS SP-81
**Flange Standard:** DIN PN10,PN16,150LB ,JIS 10K, TABLE E/D
**Face to Face:** MSS SP-81
**Testing Standard:** API-598
**Operation:** handwheel, electric, pneumatic, hydraulic, sprocket, electro-hydraulic, gear, lever
**Main material:** F55, F53, 2205, CF3M, CF8M, CF8, WCB, GGG40
**Disc material:** F55, F53, 2205, SS310, SS316L, SS316, SS304
**Sealing material:** NBR, EPDM, FKM
**Packing:** Aramid fiber, high-water based fiber, rubber, PTFE
**Applicable medium:** Applicable for coal in power plant,slag discharge, sewage treatment, food, paper making, medicine, petroleum and chemical industry, water, Oil, steam, connecting or cutting grout, gold powder, ores, slag, coal, pulp, wood pulp, tailings, fibers, dust, chemicals, sewage treatment, sedimentation tanks, asphalt, bunker export, cereals, slaughter plant waste and other media.





## QS Series Bi-directional Knife Gate Valve Grooveless Wear-Resistant Special for Mining



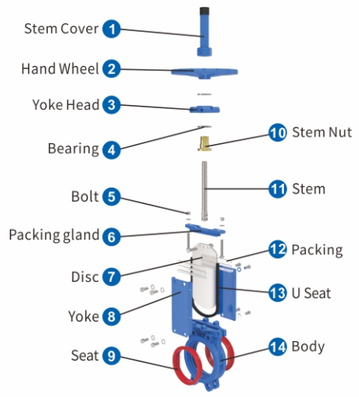


**Model:** QSZ73X
**Working Pressure:** DN50-DN100 10bar
DN125-DN200 8bar
DN250 5bar
**Type:** Wafer
**Design Standard:** MSS SP-81
**Flange Standard:** PN10/PN16 150LB TE TD
**Face to Face:** MSS SP-81
**Testing Standard:** API-598
**Operation:** handwheel, electric, pneumatic, hydraulic, sprocket, electro-hydraulic, gear
**Main material:** GGG40
**Disc material:** SS316L,SS304
**Sealing material:** PU
**Packing:** Aramid fiber, high-water based fiber, rubber, PTFE
**Applicable medium:** Applicable for coal in power plant, slag discharge, sewage treatment, food, paper making, medicine, petroleum and chemical industry, water, Oil, steam, connecting or cutting grout, gold powder, ores, slag, coal, pulp, wood pulp, tailings, fibers, dust, chemicals, sewage treatment, sedimentation tanks, asphalt, bunker export, fruit juices, cereals, slaughter plant waste and other media.

## QU Series Bi-directional seal Knife Gate Valve



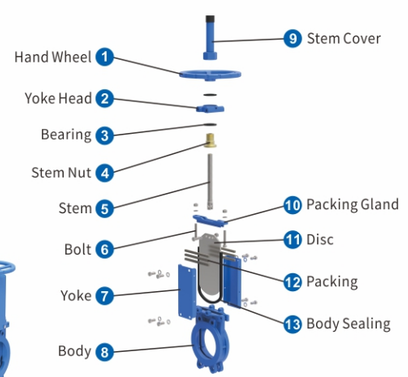


**Model:** QUZ73X
**Working Pressure:** DN50-DN100 16bar DN650-DN750 4bar
DN125-DN200 10bar DN800-DN900 3bar
DN250-DN400 7bar DN1000 2bar
DN450-DN600 5bar DN1100-DN1200 1bar
**Type:** Wafer
**Design Standard:** MSS SP-81
**Flange Standard:** DIN PN10,PN16,150LB ,JIS10K, TABLE E/D
**Face to Face:** MSS SP-81
**Testing Standard:** API-598
**Operation:** handwheel,gear box,electric,pneumatic,hydraulic, sprocket, lever
**Main material:** GGG40
**Disc material:** SS316L,SS304
**Sealing material:** NBR, EPDM
**Packing:** Aramid fiber, high-water based fiber, rubber, graphite
**Applicable medium:** Applicable for coal in power plant, slag discharge, sewage treatment, food, paper making, medicine, petroleum and chemical industry, water, Oil, steam, connecting or cutting grout, gold powder, ores, slag, coal,pulp, wood pulp, tailings, fibers, dust, chemicals, sewage treatment, sedimentation tanks, asphalt, bunker export, fruit juices, cereals, slaughter plant waste and other media.

## QC Series Bi-directional Through type Knife Gate Valve



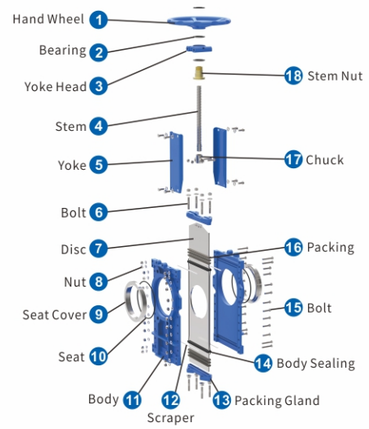


**Model:** QCZ73X
**Working Pressure:** DN50-DN100 16bar
DN125-DN200 10bar
DN250-DN400 7bar
**Type:** Wafer
**Design Standard:** MSS SP-81
**Flange Standard:** DIN PN10, PN16, 150LB, JIS 10K, TABLE E/D
**Face to Face:** MSS SP-81
**Testing Standard:** API-598
**Operation:** handwheel, electric, pneumatic, hydraulic, sprocket, electro-hydraulic, gear box, lever
**Main material:** F55, F53, 2205, CF3M, CF8M, CF8, WCB
**Disc material:** F55, F53, 2205, SS310, SS316L, SS316, SS304
**Sealing material:** NBR, EPDM, PTFE, FKM, Graphite, Metal
**Packing:** Aramid fiber, high-water based fiber, rubber, PTFE, graphite
**Applicable medium:** Applicable for coal in power plant, sewage treatment, food, paper making, medicine, petroleum and chemical industry, water, Oil, steam, connecting or cutting grout, gold powder, ores, slag, coal, pulp, wood pulp, tailings, fibers, dust, chemicals, sewage treatment, sedimentation tanks, asphalt, bunker export, cereals, slaughter plant waste and other media.

## QW Series Bi-directional Self Sealing Knife Gate Valve



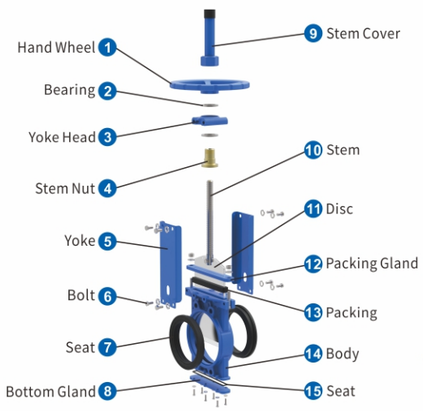


**Model:** QWZ73X
**Working Pressure:** DN50-DN100 16bar
DN125-DN200 10bar
DN250-DN400 7bar
DN450-DN500 5bar
DN600-DN700 3bar
DN800 2bar
**Type:** Wafer
**Design Standard:** MSS SP-81
**Flange Standard:** DIN PN10,PN16,150LB,JIS 10K, TABLE E/D
**Face to Face:** MSS SP-81
**Testing Standard:** API-598
**Operation:** handwheel, electric, pneumatic, hydraulic, sprocket, electro-hydraulic, gear, lever
**Main material:** F55, F53, 2205, CF3M, CF8M, CF8, WCB, GGG40
**Disc material:** F55, F53, 2205, SS310, SS316L, SS316, SS304
**Sealing material:** NBR,EPDM,NR,PU
**Packing:** Aramid fiber, high-water based fiber, rubber, PTFE
**Applicable medium:** Applicable for slurry, urban sewage treatment, sugar, powder, paper, medicine, chemicals, food and other fields.





## QWY Series Bi-directional seal Knife Gate Valve

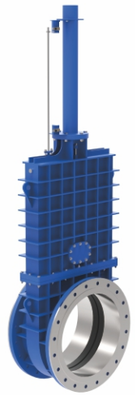

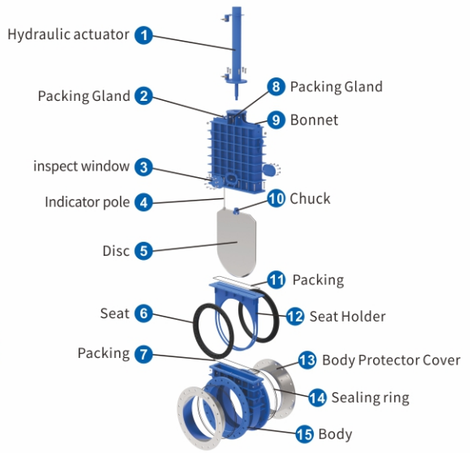


**Model:** QWYZ43X
**Working Pressure:** DN300-DN500 20bar
DN550-DN800 16bar
DN850-DN1000 12bar
DN1100-DN2000 8bar
**Type:** Wafer, Lug
**Design Standard:** MSS SP-81
**Flange Standard:** DIN PN10,PN16,150LB ,JIS 10K,TABLE E/D
**Face to Face:** MSS SP-81
**Testing Standard:** API-598
**Operation:** handwheel, electric, pneumatic, hydraulic, sprocket, electro-hydraulic,gear
**Main material:** F55, F53, 2205, CF3M, CF8M, CF8, WCB, GGG40
**Disc material:** F55, F53,2205, SS310, SS316L,SS316, SS304
**Sealing material:** NBR,EPDM,NR,PU
**Packing:** Aramid fiber, high-water based fiber, rubber, PTFE
**Applicable medium:** Applicable to Silt dredger, cutter suction dredger, mud.

## QWL Series Bi-directional Self Sealing Knife Gate Valve



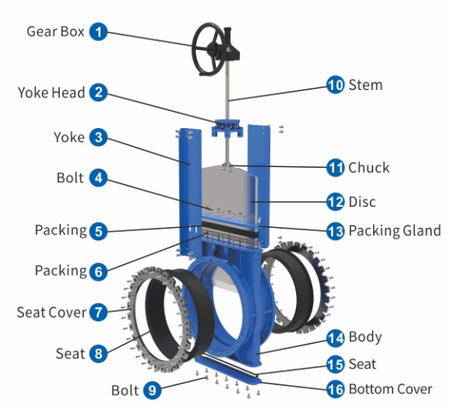


**Model:** QWLZ53X
**Working Pressure:** DN50-DN100 20bar
DN125-DN200 16bar
DN250-DN1000 10bar
DN1000-DN1400 6bar
**Type:** Lug
**Design Standard:** MSS SP-81
**Flange Standard:** DIN PN10,PN16,150LB ,JIS 10K,TABLE E/D
**Face to Face:** MSS SP-81
**Testing Standard:** API-598
**Operation:** handwheel, electric, pneumatic, hydraulic, sprocket, electro-hydraulic,gear
**Main material:** F55, F53, 2205, CF3M, CF8M, CF8, WCB, GGG40
**Disc material:** F55,F53,2205,SS310,SS316L,SS316,SS304
**Sealing material:** NBR,EPDM,NR,PU
**Packing:** Aramid fiber, high-water based fiber,rubber, PTFE, graphite
**Applicable medium:** Applicable to slurry, urban sewage treatment, powder, paper, chemicals, and other fields.

## QMG Series Bidirectional seal with U - type and adjustable knife gate valve

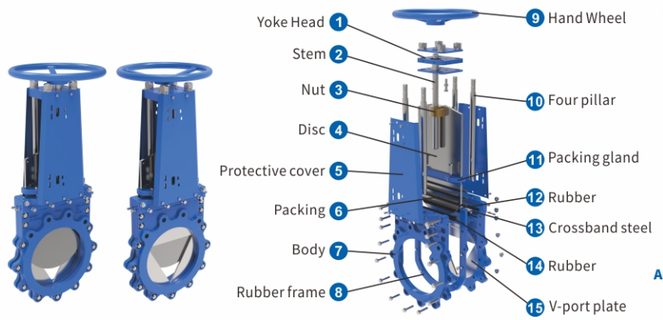


**Model:** QMGZ73X
**Working Pressure:** DN50-DN150 16bar; DN200-DN450 10bar; DN500-DN600 8bar
**Type:** Wafer, End
**Design Standard:** MSS SP-81
**Flange Standard:** DIN PN10,PN16,150LB ,JIS 10K,TABLE E/D
**Face to Face:** MSS SP-81
**Testing Standard:** API-598
**Operation:** handwheel, electric, pneumatic, hydraulic, gear
**Main material:** Q235, SS304, SS316L
**Disc material:** SS304, SS316L, F53, F55, 2205
**Sealing material:** NBR,EPDM,FKM
**Packing:** PTFE
**Applicable medium:** Alkaline solution containing ammonia, seawater, carbon emulsion (containing solid particles), slurry, mud, air, sewage, oil

## QCG Series Fully closed high pressure bidirectional seal wear-resistant knife gate valve

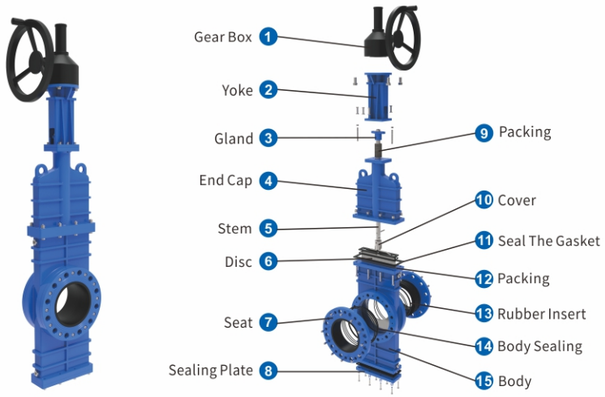


**Model:** QCGZ43H+PU
**Working Pressure:** DN50-DN200 63bar; DN250-DN400 40bar; DN450-DN600 25bar
**Type:** Flange
**Design Standard:** MSS SP-81
**Flange Standard:** DIN PN10,PN16,150LB ,JIS 10K,TABLE E/D
**Face to Face:** MSS SP-81
**Testing Standard:** API-598
**Operation:** handwheel, electric, pneumatic, hydraulic, gear
**Main material:** WCB, WCC, CF8, CF8M, CF3M
**Disc material:** SS304, SS316L, F53, F55, 2205
**Sealing material:** H+PTFE+PU
**Packing:** graphite
**Applicable medium:** Pulp, oil, gas





## QWLY Series Fully closed high pressure bidirectional seal wear-resistant knife gate valve

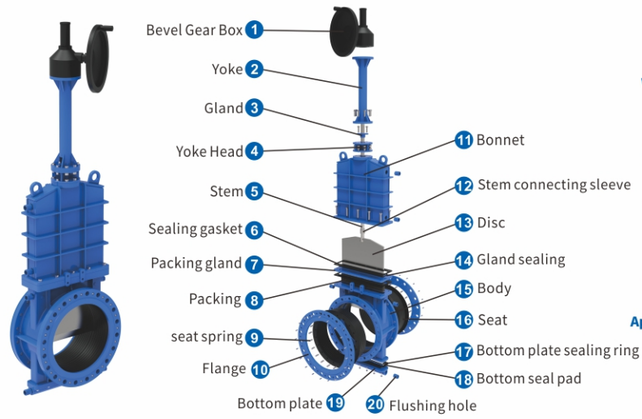


**Model:** QWLYZ43X
**Working Pressure:** DN150-DN400 25bar; DN450-DN600 16bar
**Type:** Flange
**Design Standard:** MSS SP-81
**Flange Standard:** DIN PN10,PN16,150LB ,JIS 10K,TABLE E/D
**Face to Face:** MSS SP-81
**Testing Standard:** API-598
**Operation:** handwheel, electric, pneumatic, hydraulic, gear
**Main material:** WCB, GG40, CF8, CF8M, CF3M
**Disc material:** SS304, SS316L, F53, F55
**Sealing material:** PU, EPDM, NR
**Packing:** PTFE, graphite
**Applicable medium:** Ore pulp (copper, iron, gold)

## QCA Series Bi-directional Through type Knife Gate Valve

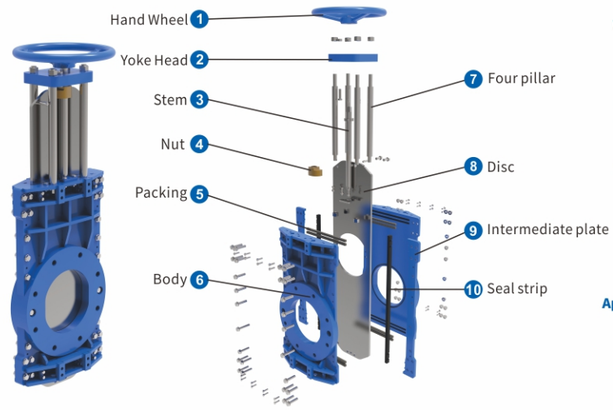


**Model:** QCAZ73X
**Working Pressure:** DN50-DN100 16bar; DN125-DN200 10bar; DN250-DN400 7bar
**Type:** Wafer
**Design Standard:** MSS SP-81
**Flange Standard:** DIN PN10, PN16, 150LB, JIS 10K, TABLE E/D
**Face to Face:** MSS SP-81
**Testing Standard:** API-598
**Operation:** handwheel, electric, pneumatic, hydraulic, sprocket, electro-hydraulic, gear box, lever
**Main material:** F55, F53, 2205, CF3M, CF8M, CF8, WCB
**Disc material:** F55, F53, 2205, SS310, SS316L, SS316, SS304
**Sealing material:** NBR, EPDM, PTFE, FKM, Graphite, Metal
**Packing:** Aramid fiber, high-water based fiber, rubber, PTFE, graphite
**Applicable medium:** Applicable for coal in power plant, sewage treatment, food, paper making, medicine, petroleum and chemical industry, water, Oil, steam, connecting or cutting grout, gold powder, ores, slag, coal, pulp, wood pulp, tailings, fibers, dust, chemicals, sewage treatment, sedimentation tanks, asphalt, bunker export, cereals, slaughter plant waste and other media.

## QWF Series Bi-directional Self Sealing Knife Gate Valve

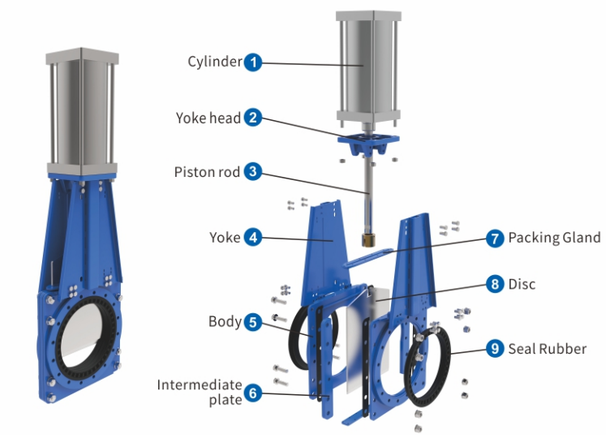


**Model:** QWFZ43X
**Working Pressure:** DN50-DN100 16bar
DN125-DN200 10bar
DN250-DN400 7bar
DN450-DN500 5bar
DN600-DN700 3bar
DN800 2bar
**Type:** Flange
**Design Standard:** JB/T8691-2013, MSS SP.81
**Flange Standard:** PN10,PN16,150LB,10k,TETD.
**Face to Face:** GB/T15188.2-94,J21,J22,MSS.SP.81
**Testing Standard:** GB/T13927-2022, API598-2016
**Operation:** handwheel, electric, pneumatic, hydraulic, electro-hydraulic,gear
**Main material:** Q235,SS304,SS316L,321,2507,2205
**Disc material:** SS304, SS316L,321,2507,2205
**Sealing material:** NBR, EPDM,FKM,NR,PU
**Packing:** Aramid fiber, high-water based fiber, rubber
**Applicable medium:** pulp,slurry

## QP Series Bi-directional seal Polyurethane lined Knife Gate Valve

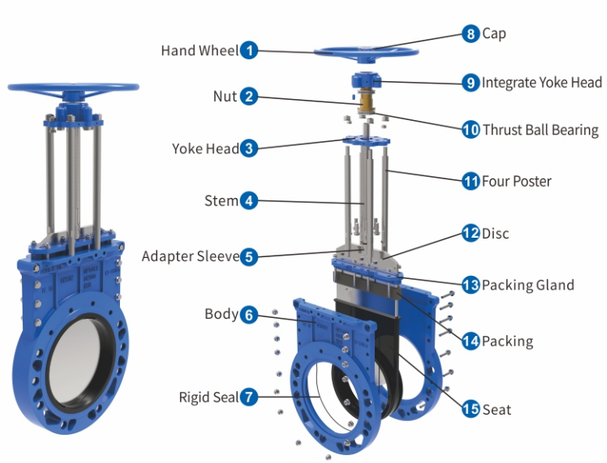


**Model:** QPZ73X
**Working Pressure:** DN50-DN100 20bar
DN125-DN150 16bar
DN200-DN300 15bar
DN350-DN400 12bar
DN450-DN600 10bar
**Type:** Wafer
**Design Standard:** MSS SP-81
**Flange Standard:** DIN PN10,PN16,150LB ,JIS10K, TABLE E/D
**Face to Face:** MSS SP-81
**Testing Standard:** API-598
**Operation:** handwheel, electric, pneumatic, hydraulic, sprocket, electro-hydraulic, gear box, lever
**Main material:** F55, F53, 2205, CF3M, CF8M, CF8, WCB, GGG40
**Disc material:** F55, F53, 2205, SS310, SS316L, SS316, SS304
**Sealing material:** Polyurethane
**Packing:** Aramid fiber, high-water based fiber, rubber, PTFE, graphite
**Applicable medium:** Applicable for coal in power plant, slag discharge, sewage treatment, food, paper making, medicine, petroleum and chemical industry, water, Oil, steam, connecting or cutting grout, gold powder, ores, slag, coal, pulp, wood pulp, tailings, fibers, dust, chemicals, sewage treatment, sedimentation tanks, asphalt, bunker export, cereals, slaughter plant waste and other media.





## QWL Series Bi-directional Self Sealing Knife Gate Valve

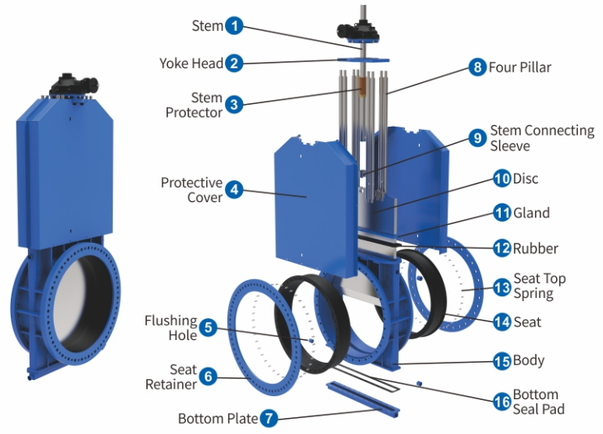


**Model:** QWLZ53X
**Working Pressure:** DN50-DN100 20bar
DN125-DN200 20bar
DN250-DN500 16bar
DN550-DN1000 10bar
DN1100-DN1400 6bar
**Type:** Flange
**Design Standard:** MSS SP-81
**Flange Standard:** DIN PN10,PN16,150LB ,JIS 10K,TABLE E/D
**Face to Face:** MSS SP-81
**Testing Standard:** API-598
**Operation:** handwheel, electric, pneumatic, hydraulic, sprocket, electro-hydraulic, gear box, lever
**Main material:** F55, F53, 2205, CF3M, CF8M, CF8, WCB, GGG40
**Disc material:** F55, F53, 2205, SS310, SS316L, SS316, SS304
**Sealing material:** NBR,EPDM,NR,PU
**Packing:** Aramid fiber, high-water based fiber, rubber, PTFE, graphite
**Applicable medium:** Applicable to slurry, urban sewage treatment, powder, paper, chemicals, and other fields.

## QC Series Bi-directional seal Polyurethane lined Knife Gate Valve

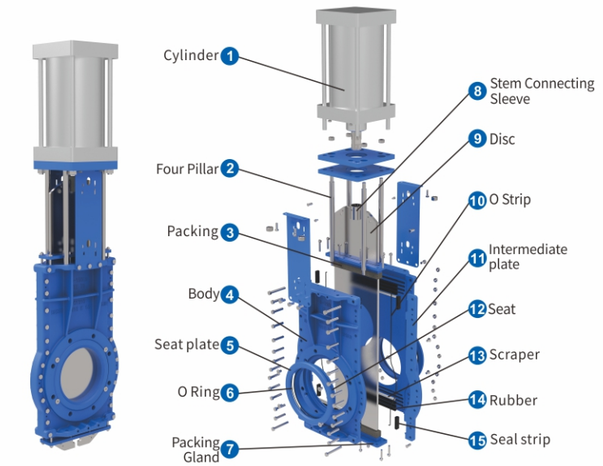


**Model:** QCZ73X
**Working Pressure:** DN50-DN100 18bar
DN125-DN200 16bar
DN250-DN400 12bar
**Type:** Wafer
**Design Standard:** MSS SP-81
**Flange Standard:** DIN PN10, PN16, 150LB, JIS 10K, TABLE E/D
**Face to Face:** MSS SP-81
**Testing Standard:** API-598
**Operation:** handwheel, electric, pneumatic, hydraulic, sprocket, electro-hydraulic, gear box, lever
**Main material:** F55, F53, 2205, CF3M, CF8M, CF8, WCB
**Disc material:** F55, F53, 2205, SS310, SS316L, SS316, SS304
**Sealing material:** NBR, EPDM, PTFE, FKM, Graphite, Metal
**Packing:** Aramid fiber, high-water based fiber, rubber, PTFE, graphite
**Applicable medium:** Applicable for coal in power plant, sewage treatment, food, paper making, medicine, petroleum and chemical industry, water, Oil, steam, connecting or cutting grout, gold powder, ores, slag, coal, pulp, wood pulp, tailings, fibers, dust, chemicals, sewage treatment, sedimentation tanks, asphalt, bunker export, cereals, slaughter plant waste and other media.