A- 优秀　B- 良好　C- 普通　X- 不良

名称	天然橡胶	苯乙烯丁二烯	丁晴橡胶	乙烯 丙烯 橡胶	硅橡胶	氟橡胶	聚氨酯
代码	NR	SBR	NBR	EPDM	Si	FKM	PU
最低温度 ºC	-75	-55	-40	-55	-110	-30	-30
最高温度 ºC	70	70	100	125	225	250	100
硬度 (shore A)	30~90	40~90	40~90	40~90	40~80	55~90	50~80
抗拉强度 (kgf/cm^2)max	35	25	25	20	15	20	20
耐矿物油性	X	X	A	X	B	A	A
耐酸性	C	C	C	A	X	A	C
耐甲苯性	X	X	X	X	X	A	A
耐乙醇性	B	B	A	A	X	A	X
耐乙醚性	X	X	C	X	X	X	C

CHSUN 奇胜阀门有限公司
CHISUN VALVE CO.,LTD

地址:浙江省温州市温州湾新区兴宇路8号
电话 :0577-86616200　邮箱 qs@chisun.cn
网站 :www.chisun.cn　www.knifegate.cn

CHISUN VALVE CO.,LTD.

Address: NO.8 Xingyu Road, Wenzhouwan New District, Wenzhou, Zhejiang
Tel:+86-0577-86616200　E-mail: qs@chisun.cn
Web:www.chisunvalve.com

2024 PRODUCT SELECTION MANUAL
产品选型手册

奇胜阀门有限公司
CHISUN VALVE CO.,LTD

COMPANY PROFILE

公司简介

公司具备阀门开发、设计、研制及阀门全性能试验能力。公司实力雄厚，生产制造设备精良，检验工序完善，产品系列齐全，价格合理，深受广大用户的信赖和好评。公司拥有设计中心、研发中心、生产数控加工中心及检测中心，并另外配有高压力42.0MPA水切割机、12000W激光切割机、线长290米静电喷涂流水线、阀门装配流水线等现代化先进设备，确保公司产品主要零部件的理化性能、表面精度，确保产品性能优越，使奇胜公司的生产工艺精益求精，在同行业中保持遥遥领先的水平。

目前公司产品已被广泛应用到国内大型项目（污水处理、化工、电厂、造纸、采矿、食品、各种浆液等）中，公司拥有自营进出口权，产品已远销俄罗斯、美国、澳大利亚、欧洲，东南亚等国家。产品执行 GB 国家标准、API 美国石油协会标准、MSS-SP-81美国阀门和管件工业制造商标准化协会标准、JIS 日本国家标准、DIN 德国国家标准。

公司坚信质量是企业的生存之本，是竞争取胜的根本实力。公司以“没有质量，何以取胜”为宗旨，诚实守信，开拓创新，热情服务，努力打造“CHISUN”品牌。公司广告语“开源节流用奇胜”更是奇胜公司对广大用户质量和服务的承诺。奇胜将不断开发新产品拓展新领域，竭诚为国内外客户提供更高品质的现代工业阀门精品。

世界品质 浙江制造
Zhejiang Makes It Happen

The company has the ability of valve development, design and full performance testing. The rich strength、excellent manufacturing equipment、perfect testing process、complete production series and reasonable price make the company deeply gained trust and praise from customers. We have design center, research and development center, production CNC machining center and testing center. In addition, the company is equipped with modern and advanced equipment such as high pressure 42.0MPA water cutting machine, 12000W laser cutting machine, line length 290 meters electrostatic spraying line, valve assembly line, to ensure the physical and chemical properties and surface accuracy of the main parts of the company's products, to ensure superior product performance, so that Chisun company's excellence production process maintains a far ahead of the level in the same industries zone.

At present, the company's products have been widely used in domestic large-scale projects (sewage treatment, chemical, power plant, paper making, mining, food, all kinds of slurry, etc.), the company has the right to import and export, products which have been exported to Russia, the United States, Australia, Europe, Southeast Asia and other countries. Products comply with GB national standard, API American Petroleum Institute standard, MSS-SP-81 American Valve and Pipe Parts Industry Manufacturers Standardization Association standard, JIS Japanese national standard, DIN German national standard.

The company firmly believes that quality is the survival of the enterprise, is the fundamental strength to win the competition. With the purpose of "no quality, how to win", The company adheres to its principles of honest and trustworthy, pioneering and innovative, enthusiastic service, and strive finally to create "CHISUN" brand. And the slogan "open source and reduce expenditure with Chisun", showed the quality and service commitment to majority of users. Chisun will continue to develop new products to expand new fields, dedicated to providing customers at home and abroad with higher quality of modern industrial valves.

数字化加工中心车间
Digital machining center workshop

数控车床
CNC Lathe

数控立式加工中心
CNC vertical machining center

2m 龙门加工中心
2M Gantry machining center

机械加工中心
Machining Center

4m 数控立车
4M CNC vertical lathe

3m 端面车床
3M End lathe

DN500-3m 大口径阀门装配车间
DN500-3M Large-diameter valve assembly workshop

DN50-DN450小口径阀门装配车间
DN50-DN450 Small-diameter valve assembly workshop

A 检测试压区
(A)Testing pressure area

B 检测试压区
(B)Testing pressure area

C 检测试压区
(C)Testing pressure area

D 检测试压区
(D)Testing pressure area

6000W 激光切割区
6000W Laser Cutting Area

12000W 激光切割区
12000W Laser Cutting Area

电焊区
Welding Area

抛光打磨区
Polishing and grinding area

抛沙区
Polish area

钻孔区
Drilling area

DN50-DN450 / 300m静电喷涂流水线
DN50-DN450 / 300m Electrostatic spraying line

DN600-3m 静电喷涂流水线
DN600-3M Electrostatic spraying line

清洗包装区
Cleaning packaging area

清洗包装区
Cleaning packaging area

成品区
Finished product area

半成品区
Semi-finished products area

配件区
Accessories Area

A 毛坯区
(A)unprocessed area

B 毛坯区
(B)unprocessed area

C 毛坯区
(C)unprocessed area

D 毛坯区
(D)unprocessed area

世界品质 浙江制造
Zhejiang Makes It Happen

ENTERPRISE QUALIFICATION
企业资质

Strength Creates Brilliance

实力铸就辉煌

卓越永恒 与时俱进

我们一直以世界先进的质量管理体系来确保产品质量符合国际阀门行业的标准。

We have been using the world's advanced quality management system to ensure product quality in line with the international valve industry standards

DEVELOPMENT HISTORY
发展历程

世界品质 浙江制造
Zhejiang Makes It Happen

Ride The Wind And Waves Open Up The Future

乘风破浪 开拓未来

2002 公司成立
Company established

奇胜阀门有限公司成立于2002年6月前身是温州奇胜阀门制造有限公司，公司专业生产刀闸阀。

Chisun Valve Co., Ltd established in 2002, it's used to be Chisun Valve Manufacturing Co., Ltd,which specialized in the production of knife gate valves

2006 创立初期
The nascent years of Chisun

公司生产的无摩擦区域金属密封刀闸阀完成科学技术成果鉴定，获国际先进，同年获浙江省高新技术产品证书。

The frictionless area metal knife gate valve produced by the company has completed the scientific and technological achievement appraisal and won the high-tech product certificate of Zhejiang Province

2008 运筹起步
Strategy to start

公司生产的无摩擦区域金属密封刀闸阀获国家重点新产品证书。

The frictionless area metal seal knife gate valve produced by the company has won the national key new product certificate

2017 小有成就
Have some achievement

公司 CHISUN 注册了欧盟商标。

The company (CHISUN)registered the European Union trademark

2019 稳定前进
Moving on steadily

公司引进高功率激光切割设备，进一步提高了刀闸阀产品产能和产品制造工艺。

The company introduced high power laser cutting equipment, further improve the knife gate valve product capacity and product manufacturing process

2020 不断创新
Innovating constantly

公司 CHISUN 注册了美国商标。

The company (CHISUN)registered the American trademark

2021 开拓未来
Build up the future

公司更名为奇胜阀门有限公司，无区域化的公司名称不仅体现了公司的规模和实力，更为公司布局更长远的发展提供了便利。

The company changed its name to Chisun Valve Co., LTD., no regional company name not only reflects the strength of the company, but also provides convenience for long-term development of the company

2022 再创辉煌
Create new brilliance

公司二期、三期项目启动，内衬聚氨酯刀闸阀专利产业化。

The company's Phase II and Phase III projects were launched,lined with polyurethane type of knife gate valve patent industrialization.

QB 系列 Series 单向薄阀座可更换型刀闸阀 Unidirectional seal Knife Gate Valve

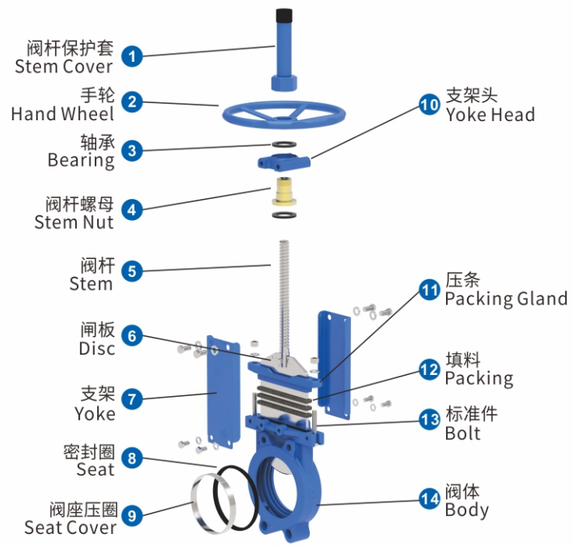

型号： QBZ73X
工作压力： DN50-DN100 1.6Mpa DN650-DN750 0.4Mpa
DN125-DN200 1.0Mpa DN800-DN900 0.3Mpa
DN250-DN400 0.7Mpa DN1000 0.2Mpa
DN450-DN600 0.5Mpa DN1100-DN1400 0.1Mpa
连接形式： 对夹，梅花
设计标准： JB/T8691-2013
法兰标准： GB/T9113.1-2010
ASME B16.5 (2"_24")
ASME B16.47 (26"_60")
AS2129:TABLE D
AS2129:TABLE E
结构长度： GB/T15188.2-94 chart6-7
检验标准： GB/T13927-2008
开关形式： 手轮，涡轮，气动，电装，液动，电液动，链轮盘，杠杆
阀体材质： F55, F53, 2205, CF3M, CF8M, CF8, WCB, GGG40
闸板材质： F55, F53, 2205, SS310, SS316L, SS316, SS304
密封材质： NBR,EPDM,PTFE,FKM,石墨，金属密封
填料： 芳纶，高水基，四氟，橡胶，石墨
适用介质： 适用于泥浆、城市污水处理、糖厂、粉体、造纸、医药、化工、食品等领域。

Model: QBZ73X
Working Pressure: DN50-DN100 16bar DN650-DN750 4bar
DN125-DN200 10bar DN800-DN900 3bar
DN250-DN400 7bar DN1000 2bar
DN450-DN600 5bar DN1100-DN1400 1bar
Type: Wafer, Lug
Design Standard: MSS SP-81
Flange Standard: DIN PN10,PN16,150LB ,JIS 10K,TABLE E/D
Face to Face: MSS SP-81
Testing Standard: API-598
Operation: manual, electric, pneumatic, hydraulic, sprocket, electro-hydraulic, gear ,lever
Main material: F55, F53, 2205, CF3M, CF8M, CF8, WCB, GGG40
Disc material: F55, F53, 2205, SS310, SS316L, SS316, SS304
Sealing material: NBR, EPDM, PTFE, FKM, Graphite, Metal
Packing: Aramid fiber, high-water based fiber, rubber, PTFE, graphite
Applicable medium: for pulp, cement slurry, gold ore powder,coal slurry, pulp, chemical treatment of sewage, sedimentation tanks, asphalt,acid and other liquids and other media.

QV 系列 Series 单向厚阀座可更换型刀闸阀 Unidirectional seal Knife Gate Valve

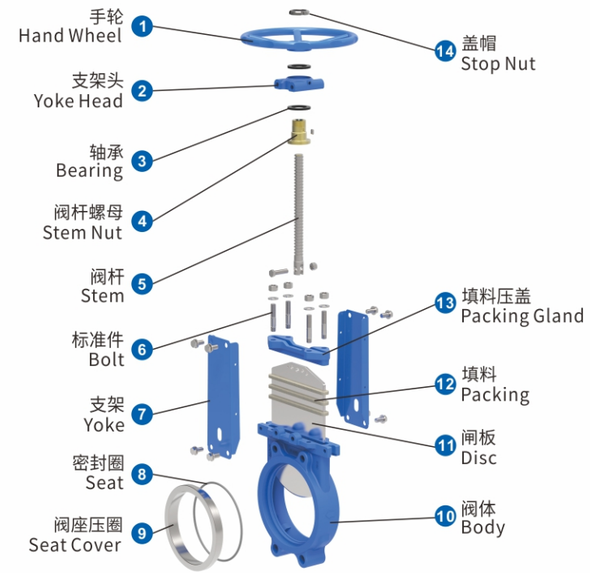

型号： QVZ73X
工作压力： DN50-DN100 1.6Mpa
DN125-DN200 1.0Mpa
DN250-DN400 0.7Mpa
连接形式： 对夹，梅花
设计标准： JB/T8691-2013
法兰标准： GB/T9113.1-2010
ASME B16.5 (2"_24")
ASME B16.47 (26"_60")
AS2129:TABLE D
AS2129:TABLE E
结构长度： GB/T15188.2-94 chart6-7
检验标准： GB/T13927-2008
开关形式： 手轮，涡轮，气动，电装，液动，电液动，链轮盘，杠杆
阀体材质： F55, F53, 2205, CF3M, CF8M, CF8, WCB, GGG40
闸板材质： F55,F53,2205,SS310,SS316L, SS316, SS304
密封材质： NBR,EPDM,PTFE,FKM,石墨
填料： 芳纶，高水基，四氟，橡胶，石墨
适用介质： 适用于泥浆、城市污水处理、糖厂、粉体、造纸、医药、化工等油品 ,金属密封适用于电厂的选煤，排渣，矿粉，矿渣，炉渣等固体介质。

Model: QVZ73X
Working Pressure: DN50-DN100 16bar
DN125-DN200 10bar
DN250-DN400 7bar
Type: Wafer,Lug
Design Standard: MSS SP-81
Flange Standard: DIN PN10,PN16,150LB, JIS 10K, TABLE E/D
Face to Face: MSS SP-81
Testing Standard: API-598
Operation: handwheel, electric, pneumatic, hydraulic, sprocket, electro-hydraulic, gear, lever
Main material: F55, F53, 2205, CF3M, CF8M, CF8, WCB, GGG40
Disc material: F55, F53, 2205, SS310, SS316L, SS316, SS304
Sealing material: NBR, EPDM, PTFE, FKM, Graphite
Packing: Aramid fiber, high-water based fiber, rubber, PTFE, graphite
Applicable medium: Suitable for slurry, municipal wastewater treatment, sugar mills, powder, paper, medicine, chemical and other oils, metal seals are suitable for power plant coal preparation, slag discharge, slag, slag, slag and other solid media.

QH 系列 Series 单向全封闭方闸门
Unidirectional Sealing Knife Gate Valve

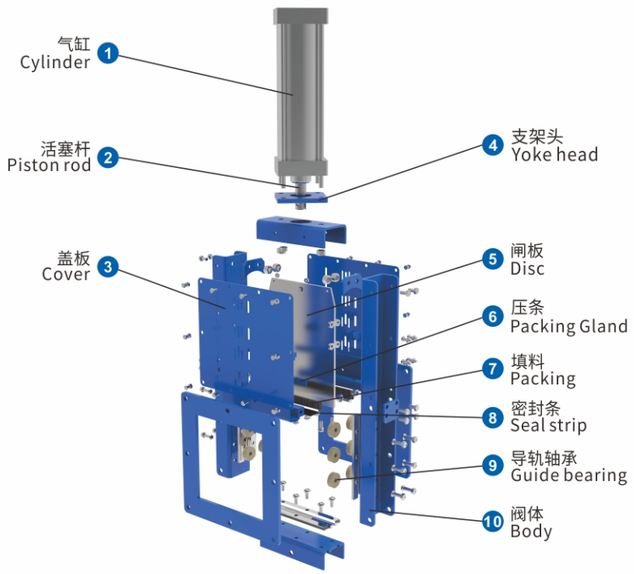

型号： QHZ43X
连接形式： 方形法兰
法兰标准： 定制
结构长度： 工厂标准
检验标准： GB/T13927-2008
开关形式： 手轮，涡轮，气动，电装，液动，电液动，链轮盘，杠杆
阀体材质： 结构钢，不锈钢
闸板材质： F55,F53,2205,SS310,SS316L,SS316, SS304
密封材质： EPDM,FKM,NBR,PTFE，石墨，金属密封
填料： 芳纶，高水基，四氟，橡胶
适用介质： 适用于城市污水处理、糖厂、粉体、医药、化工等领域。

Model: QHZ43X
Type: SquareFlange
Flange Standard: custom against client' s requirement.
Face to Face: MSS SP-81
Testing Standard: API-598
Operation: handwheel, electric, pneumatic, hydraulic, sprocket, electro-hydraulic, gear, lever
Main material: Q235,Stainless steel
Disc material: F55,F53,2205,SS310,SS316L,SS316,SS304
Sealing material: NBR,FKM,graphite,Metal to Metal,EPDM, Graphite
Packing: Aramid fiber, high-water based fiber, rubber, PTFE
Applicable medium: Applicable for Urban sewage treatment, sugar, powder, medicine, chemical and other fields.

QD 系列 Series 单向排渣专用刀闸阀
Unidirectional seal Knife Gate Valve Slag disposal

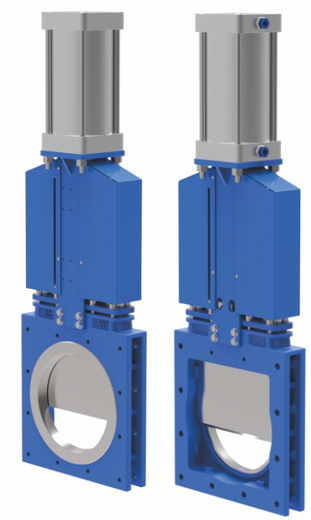

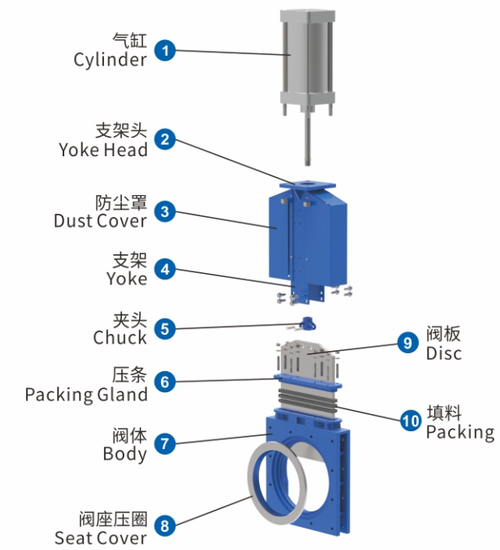

型号： QDZ43X
工作压力： DN150-DN200 1.0Mpa
DN250-DN400 0.7Mpa
DN450-DN550 0.5Mpa
DN600-DN700 0.3Mpa
连接形式： 法兰
设计标准： JB/T8691-2013
法兰标准： GB/T9113.1-2010
ASME B16.5 (2"_24")
ASME B16.47 (26"_60")
AS2129:TABLE D
AS2129:TABLE E
结构长度： GB/T15188.2-94 chart6-7
检验标准： GB/T13927-2008
开关形式： 手轮，涡轮，气动，电装，液动，电液动，链轮盘，杠杆
阀体材质： F55,F53,2205,CF3M,CF8M,CF8, WCB,GGG40
闸板材质： F55, F53, 2205, SS310, SS316L, SS316, SS304
密封材质： NBR,EPDM,PTFE,FKM,石墨，金属密封
填料： 芳纶，高水基，四氟，橡胶，石墨
适用介质： 适用排渣，粉尘，落渣，电厂，旋流器。

Model: QDZ43X
Working Pressure: DN150-DN200 10bar
DN250-DN400 7bar
DN450-DN550 5bar
DN600-DN700 3bar
Type: Flange
Design Standard: MSS SP-81
Flange Standard: PN10/PN16 150LB 10K TE TD
Face to Face: MSS SP-81
Testing Standard: API-598
Operation: handwheel,electric,pneumatic,hydraulic,sprocket, electro-hydraulic, gear, lever
Main material: F55, F53, 2205, CF3M, CF8M, CF8, WCB, GGG40
Disc material: F55, F53, 2205, SS310, SS316L, SS316, SS304
Sealing material: NBR, EPDM, PTFE, FKM, Graphite, Metal
Packing: Aramid fiber, high-water based fiber, rubber, PTFE, graphite
Applicable medium: Applicable for Dust,Solid Particles,Coal, oil, chemical and so on.Slag, cinder, dislagging recommend.

QY 系列 Series 单向无中填料全封闭中压刀闸阀
Unidirectional seal Knife Gate Valve

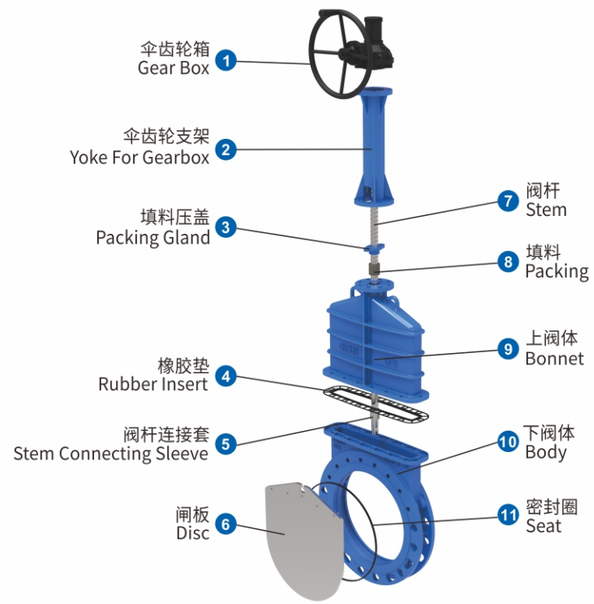

型号： QYZ73X
工作压力： DN50-DN100 2.5Mpa
DN125-DN200 2.0Mpa
DN250-DN400 1.6Mpa
连接形式： 对夹,梅花，法兰
设计标准： JB/T8691-2013
法兰标准： GB/T9113.1-2010
ASME B16.5（2"_24"）
ASME B16.47（26"_60"）
AS2129:TABLE D
AS2129:TABLE E
结构长度： GB/T15188.2-94 chart6-7
检验标准： GB/T13927-2008
开关形式： 手轮，涡轮，气动，电装，液动，电液动，链轮盘
阀体材质： F55,F53,2205,CF3M,CF8M,CF8,WCB,GGG40
闸板材质： F55,F53,2205,SS310,SS316L,SS316,SS304
密封材质： EPDM,FKM,NBR,PTFE
填料： 四氟
适用介质： 适用于城市污水处理、医药、化工等领域。

Model: QYZ73X
Working Pressure: DN50-DN100 25bar
DN125-DN200 20bar
DN250-DN400 16bar
Type: Wafer,Lug,Flange
Design Standard: MSS SP-81
Flange Standard: DIN PN10,PN16,150LB ,JIS 10K, TABLE E/D
Face to Face: MSS SP-81
Testing Standard: API-598
Operation: handwheel,electric,pneumatic,hydraulic,sprocket,electro-hydraulic, gear
Main material: F55,F53,2205,CF3M,CF8M,CF8,WCB,GGG40
Disc material: F55,F53,2205,SS310,SS316L,SS316,SS304
Sealing material: EPDM,FKM,NBR,PTFE
Packing: PTFE
Applicable medium: Applicable for coal in power plant, slag discharge, sewage treatment, food, paper making, medicine, petroleum and chemical industry, water, Oil, steam, connecting or cutting grout, gold powder, ores, slag, coal, pulp, wood pulp, tailings, fibers, dust, chemicals, sewage treatment, sedimentation tanks, asphalt, bunker export, cereals, slaughter plant waste and other media.

QVY 系列 Series 单向带中填料全封闭中压刀闸阀
Unidirectional seal Knife Gate Valve

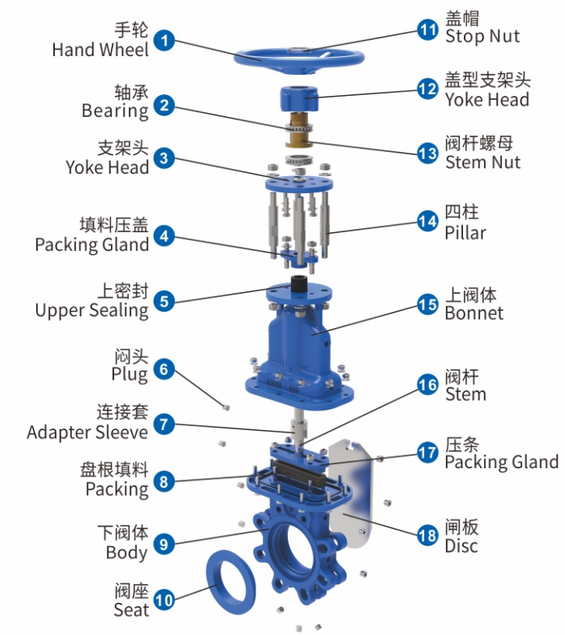

型号： QVYZ73X
工作压力：
连接形式： 对夹，梅花，法兰
设计标准： JB/T8691-2013
法兰标准： GB/T9113.1-2010
ASME B16.5（2"_24"）
ASME B16.47（26"_60"）
AS2129:TABLE D
AS2129:TABLE E
结构长度： GB/T15188.2-94 chart6-7
检验标准： GB/T13927-2008
开关形式： 手轮，涡轮，气动，电装，液动，电液动，链轮盘
阀体材质： F55,F53,2205,SS310,CF3M，CF3,CF8M,CF8 WCB, GGG40
闸板材质： F55,F53,2205,SS310,SS316L,SS316, SS304
密封材质： EPDM,FKM,NBR,PTFE
填料： 芳纶，高水基，四氟，橡胶
适用介质： 适用于泥浆、矿浆，城市污水处理、糖厂、粉体、造纸、医药、化工等领域。

Model: QVYZ73X
Working Pressure:
Type: Wafer,Lug,Flange
Design Standard: MSS SP-81
Flange Standard: DIN PN10,PN16,150LB ,JIS 10K,TABLE E/D
Face to Face: MSS SP-81
Testing Standard: API-598
Operation: handwheel, electric, pneumatic, hydraulic, sprocket, electro-hydraulic, gear
Main material: F55,F53,2205,SS310,CF3M,CF3,CF8M,CF8 WCB, GGG40
Disc material: F55, F53,2205, SS310, SS316L,SS316, SS304
Sealing material: EPDM,FKM,NBR,PTFE
Packing: Aramid fiber, high-water based fiber, rubber, PTFE
Applicable medium: Applicable for coal in power plant, slag discharge, sewage treatment, food, paper making, medicine, petroleum and chemical industry, water, Oil, steam, connecting or cutting grout, gold powder, ores, slag, coal, pulp, wood pulp, tailings,fibers, dust, chemicals, sewage treatment, sedimentation tanks, asphalt, bunker export, cereals, slaughter plant waste and other media.

QYA 系列 Series 单向暗杆暗板式全封闭刀闸阀
Unidirectional seal encolosed Knife Gate Valve

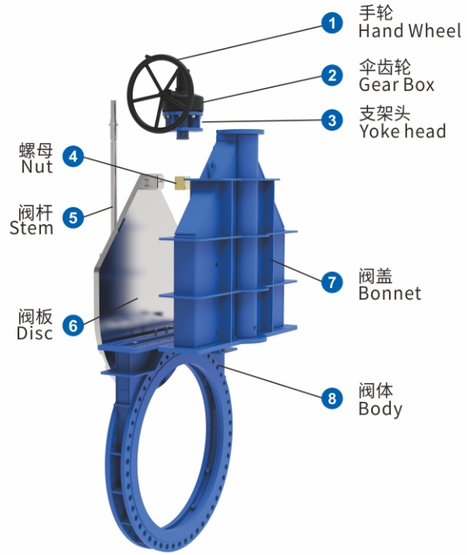

型号： QYAZ73X
工作压力： DN50-DN100 1.6Mpa DN650-DN750 0.4Mpa
DN125-DN200 1.0Mpa DN800-DN900 0.3Mpa
DN250-DN400 0.7Mpa DN1000 0.2Mpa
DN450-DN600 0.5Mpa DN1100-DN1400 0.2Mpa
连接形式： 对夹，法兰
设计标准： JB/T8691-2013
法兰标准： GB/T9113.1-2010
ASME B16.5（2"_24"）
ASME B16.47（26"_60"）
AS2129:TABLE D
AS2129:TABLE E
结构长度： GB/T15188.2-94 chart6-7
检验标准： GB/T13927-2008
开关形式： 手轮，涡轮，气动，电装，液动，电液动，链轮盘
阀体材质： F55,F53,2205,CF3M,CF8M,CF8,WCB,GGG40
闸板材质： F55,F53,2205,SS310,SS316L,SS316,SS304
密封材质： EPDM,FKM,NBR,PTFE
填料： 四氟
适用介质： 适用于泥浆、矿浆，城市污水处理、糖厂、粉体、造纸、医药、化工等领域。

Model: QYAZ73X
Working Pressure: DN50-DN100 16bar DN650-DN750 4bar
DN125-DN200 10bar DN800-DN900 3bar
DN250-DN400 7bar DN1000 2bar
DN450-DN600 5bar DN1100-DN1400 2bar
Type: Wafer,Flange
Design Standard: MSS SP-81
Flange Standard: DIN PN10,PN16,150LB ,JIS 10K, TABLE E/D
Face to Face: MSS SP-81
Testing Standard: API-598
Operation: handwheel,electric,pneumatic,hydraulic,sprocket,electro-hydraulic, gear
Main material: F55,F53,2205,CF3M,CF8M,CF8,WCB,GGG40
Disc material: F55,F53,2205,SS310,SS316L,SS316,SS304
Sealing material: EPDM,FKM,NBR,PTFE
Packing: PTFE
Applicable medium: Applicable for coal in power plant, slag discharge, sewage treatment, food, paper making, medicine,petroleum and chemical industry, water, Oil, steam, connecting or cutting grout, gold powder, ores, slag, coal, pulp, wood pulp, tailings, fibers, dust, chemicals, sewage treatment, sedimentation tanks, asphalt, bunker export, cereals, slaughter plant waste and other media.

QC 系列 Series 双向密封穿透式刀闸阀
Bi-directional Through type Knife Gate Valve

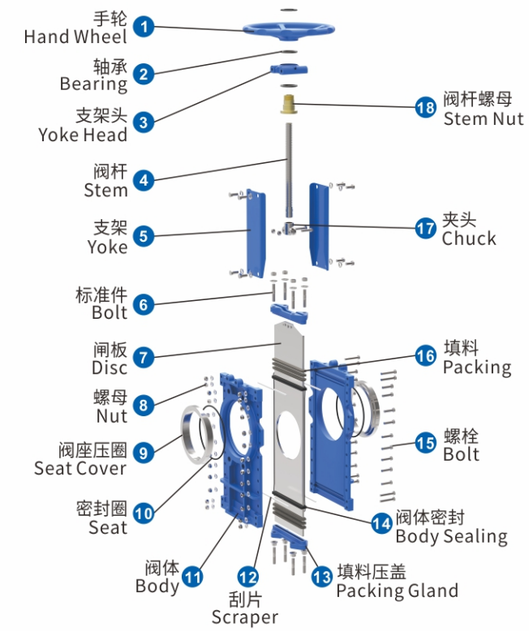

型号： QCZ73X
工作压力： DN50-DN100 1.6Mpa
DN125-DN200 1.0Mpa
DN250-DN400 0.7Mpa
连接形式： 对夹
设计标准： JB/T8691-2013
法兰标准： GB/T9113.1-2010
ASME B16.5（2"_24"）
ASME B16.47（26"_60"）
AS2129:TABLE D
AS2129:TABLE E
结构长度： GB/T15188.2-94 chart6-7
检验标准： GB/T13927-2008
开关形式： 手轮，涡轮，气动，电装，液动，电液动，链轮盘，杠杆
阀体材质： F55, F53, 2205, CF3M, CF8M, CF8, WCB
闸板材质： F55, F53, 2205, SS310, SS316L, SS316, SS304
密封材质： NBR,EPDM,PTFE,FKM,石墨，金属密封
填料： 芳纶，高水机，四氟，橡胶，石墨
适用介质： 适用于矿山电厂的选煤、排渣、城市污水处理、食品、造纸、医药、石油、化工等油品、水、蒸汽管路上，接通或截断管路中的水泥浆、金矿粉、矿砂、炉渣、煤泥、纸浆、木浆、尾矿、纤维、粉尘、化学品处理污水、沉淀池、沥青、料仓出口、水果汁、谷物、屠宰厂废水等介质，特别使用于颗粒，粉尘类的介质。

Model: QCZ73X
Working Pressure: DN50-DN100 16bar
DN125-DN200 10bar
DN250-DN400 7bar
Type: Wafer
Design Standard: MSS SP-81
Flange Standard: DIN PN10, PN16, 150LB, JIS 10K, TABLE E/D
Face to Face: MSS SP-81
Testing Standard: API-598
Operation: handwheel, electric, pneumatic, hydraulic, sprocket, electro-hydraulic, gear box, lever
Main material: F55, F53, 2205, CF3M, CF8M, CF8, WCB
Disc material: F55, F53, 2205, SS310, SS316L, SS316, SS304
Sealing material: NBR, EPDM, PTFE, FKM, Graphite, Metal
Packing: Aramid fiber, high-water based fiber, rubber, PTFE, graphite
Applicable medium: Applicable for coal in power plant, sewage treatment, food, paper making, medicine, petroleum and chemical industry, water, Oil, steam, connecting or cutting grout, gold powder, ores, slag, coal, pulp, wood pulp, tailings, fibers, dust, chemicals, sewage treatment, sedimentation tanks, asphalt, bunker export, cereals, slaughter plant waste and other media.

QCA 系列 Series 双向密封穿透式刀闸阀
Bi-directional Through type Knife Gate Valve

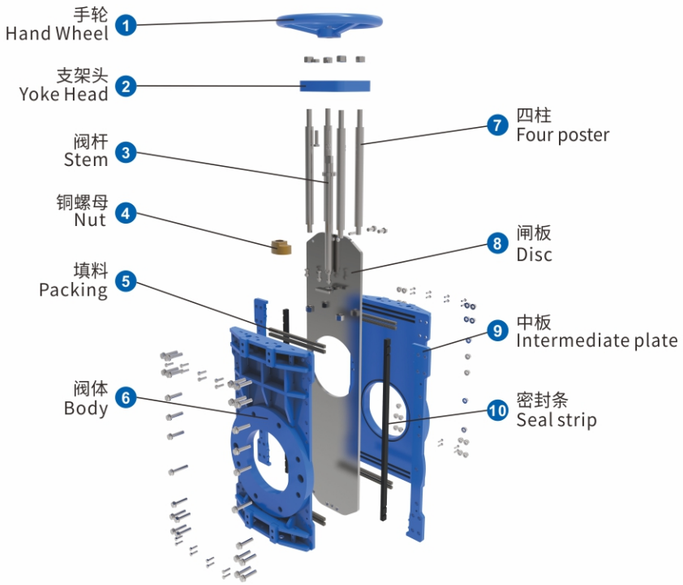

型号： QCAZ73X
工作压力： DN50-DN100 1.6Mpa
DN125-DN200 1.0Mpa
DN250-DN400 0.7Mpa
连接形式： 对夹
设计标准： JB/T8691-2013
法兰标准： GB/T9113.1-2010
ASME B16.5（2"_24"）
ASME B16.47（26"_60"）
AS2129:TABLE D
AS2129:TABLE E
结构长度： GB/T15188.2-94 chart6-7
检验标准： GB/T13927-2008
开关形式： 手轮，涡轮，气动，电装，液动，电液动，链轮盘，杠杆
阀体材质： F55, F53, 2205, CF3M, CF8M, CF8, WCB
闸板材质： F55, F53, 2205, SS310, SS316L, SS316, SS304
密封材质： NBR,EPDM,PTFE,FKM,石墨，金属密封
填料： 芳纶，高水机，四氟，橡胶，石墨
适用介质： 适用于矿山电厂的选煤、排渣、城市污水处理、食品、造纸、医药、石油、化工等油品、水、蒸汽管路上，接通或截断管路中的水泥浆、金矿粉、矿砂、炉渣、煤泥、纸浆、木浆、尾矿、纤维、粉尘、化学品处理污水、沉淀池、沥青、料仓出口、水果汁、谷物、屠宰厂废水等介质，特别使用于颗粒，粉尘类的介质。

Model: QCAZ73X
Working Pressure: DN50-DN100 16bar
DN125-DN200 10bar
DN250-DN400 7bar
Type: Wafer
Design Standard: MSS SP-81
Flange Standard: DIN PN10, PN16, 150LB, JIS 10K, TABLE E/D
Face to Face: MSS SP-81
Testing Standard: API-598
Operation: handwheel, electric, pneumatic, hydraulic, sprocket, electro-hydraulic, gear box, lever
Main material: F55, F53, 2205, CF3M, CF8M, CF8, WCB
Disc material: F55, F53, 2205, SS310, SS316L, SS316, SS304
Sealing material: NBR, EPDM, PTFE, FKM, Graphite, Metal
Packing: Aramid fiber, high-water based fiber, rubber, PTFE, graphite
Applicable medium: Applicable for coal in power plant, sewage treatment, food, paper making, medicine, petroleum and chemical industry, water, Oil, steam, connecting or cutting grout, gold powder, ores, slag, coal, pulp, wood pulp, tailings, fibers, dust, chemicals, sewage treatment, sedimentation tanks, asphalt, bunker export, cereals, slaughter plant waste and other media.

QCB 系列 Series 双向密封穿透式刀闸阀
Bi-directional Through type Knife Gate Valve

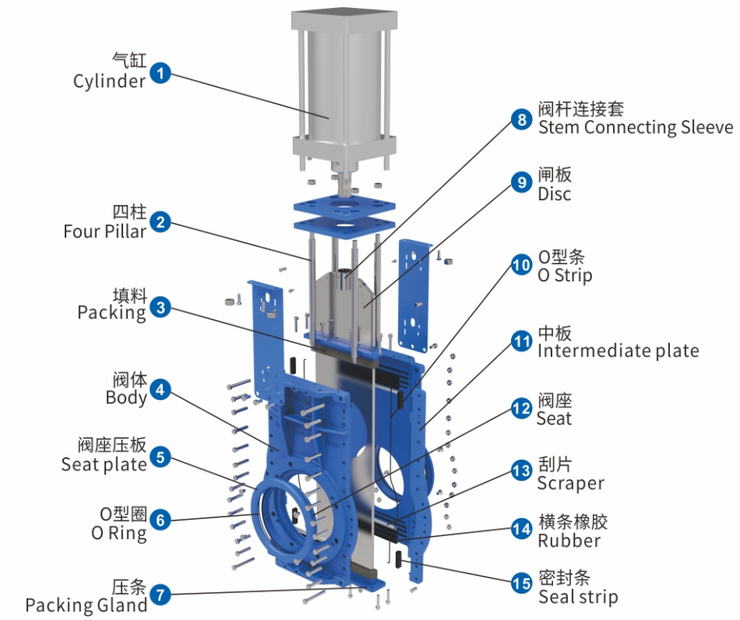

型号： QCBZ73X
工作压力： DN50-DN100 1.8Mpa
DN125-DN200 1.6Mpa
DN250-DN400 1.2Mpa
连接形式： 对夹
设计标准： JB/T8691-2013
法兰标准： GB/T9113.1-2010
ASME B16.5（2"_24"）
ASME B16.47（26"_60"）
AS2129:TABLE D
AS2129:TABLE E
结构长度： GB/T15188.2-94 chart6-7
检验标准： GB/T13927-2008
开关形式： 手轮，涡轮，气动，电装，液动，电液动，链轮盘，杠杆
阀体材质： F55, F53, 2205, CF3M, CF8M, CF8, WCB
闸板材质： F55, F53, 2205, SS310, SS316L, SS316, SS304
密封材质： NBR,EPDM,PTFE,FKM,石墨，金属密封
填料： 芳纶，高水机，四氟，橡胶，石墨
适用介质： 适用于矿山电厂的选煤、排渣、城市污水处理、食品、造纸、医药、石油、化工等油品、水、蒸汽管路上，接通或截断管路中的水泥浆、金矿粉、矿砂、炉渣、煤泥、纸浆、木浆、尾矿、纤维、粉尘、化学品处理污水、沉淀池、沥青、料仓出口、水果汁、谷物、屠宰厂废水等介质，特别使用于颗粒，粉尘类的介质。

Model: QCBZ73X
Working Pressure: DN50-DN100 18bar
DN125-DN200 16bar
DN250-DN400 12bar
Type: Wafer
Design Standard: MSS SP-81
Flange Standard: DIN PN10, PN16, 150LB, JIS 10K, TABLE E/D
Face to Face: MSS SP-81
Testing Standard: API-598
Operation: handwheel, electric, pneumatic, hydraulic, sprocket, electro-hydraulic, gear box, lever
Main material: F55, F53, 2205, CF3M, CF8M, CF8, WCB
Disc material: F55, F53, 2205, SS310, SS316L, SS316, SS304
Sealing material: NBR, EPDM, PTFE, FKM, Graphite, Metal
Packing: Aramid fiber, high-water based fiber, rubber, PTFE, graphite
Applicable medium: Applicable for coal in power plant, sewage treatment, food, paper making, medicine, petroleum and chemical industry, water, Oil, steam, connecting or cutting grout, gold powder, ores, slag, coal, pulp, wood pulp, tailings, fibers, dust, chemicals, sewage treatment, sedimentation tanks, asphalt, bunker export, cereals, slaughter plant waste and other media.

QCG 系列 Series 全封闭高压双向耐磨刀闸阀
Fully closed high pressure bidirectional seal wear-resistant knife gate valve

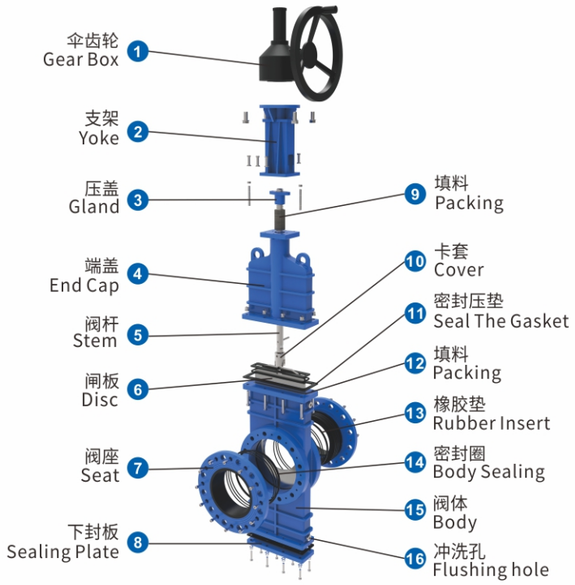

型号： QCGZ43H+PU
工作压力： DN50-DN200 6.3Mpa
DN250-DN400 4.0Mpa
DN450-DN600 2.5Mpa
连接形式： 法兰
设计标准： JB/T8691-2013
法兰标准： GB/T9124.2-2019, PN16,PN25,PN40,PN63
结构长度： GB/T15188.2-94 chart6-7
检验标准： GB/T13927-2008
开关形式： 手轮，伞齿轮，电动，液动，气动
阀体材质： WCB, WCC, CF8, CF8M, CF3M
闸板材质： SS304, SS316L, F53, F55, 2205
密封材质： H+PTFE+PU
填料： 石墨
适用介质： 矿浆，石油，气体。

Model: QCGZ43H+PU
Working Pressure: DN50-DN200 63bar
DN250-DN400 40bar
DN450-DN600 25bar
Type: Flange
Design Standard: MSS SP-81
Flange Standard: DIN PN10,PN16,150LB ,JIS 10K,TABLE E/D
Face to Face: MSS SP-81
Testing Standard: API-598
Operation: handwheel, electric, pneumatic, hydraulic, gear
Main material: WCB, WCC, CF8, CF8M, CF3M
Disc material: SS304, SS316L, F53, F55, 2205
Sealing material: H+PTFE+PU
Packing: graphite
Applicable medium: Pulp, oil, gas

QJ 系列 Series 分体式双向密封无凹槽内腔全衬胶刀闸阀
Bi-directional seal Rubber Lining Knife Gate Valve

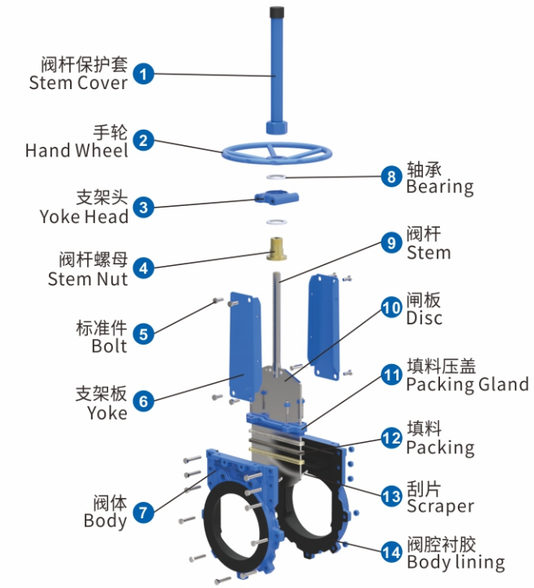

型号： QJZ73X
工作压力： DN50-DN200 1.6Mpa
DN250-DN400 1.0Mpa
连接形式： 对夹
设计标准： JB/T8691-2013
法兰标准： GB/T9113.1-2010
ASME B16.5 (2"_24")
ASME B16.47 (26"_60")
AS2129:TABLE D
AS2129:TABLE E
结构长度： GB/T15188.2-94 chart6-7
检验标准： GB/T13927-2008
开关形式： 手轮，涡轮，气动，电装，液动，电液动，链轮盘，杠杆
阀体材质： F55, F53, 2205, CF3M, CF8M, CF8, WCB, GGG40
闸板材质： F55, F53, 2205, SS310, SS316L, SS316, SS304
密封材质： NBR, EPDM, FKM, PU
填料： 芳纶，高水基，四氟，橡胶
适用介质： 适用于泥浆、城市污水处理、糖厂、造纸、医药、化工等油品，等固体介质。

Model: QJZ73X
Working Pressure: DN50-DN200 16bar
DN250-DN400 10bar
Type: Wafer
Design Standard: MSS SP-81
Flange Standard: DIN PN10,PN16,150LB ,JIS 10K, TABLE E/D
Face to Face: MSS SP-81
Testing Standard: API-598
Operation: handwheel, electric, pneumatic, hydraulic, sprocket, electro-hydraulic, gear, lever
Main material: F55, F53, 2205, CF3M, CF8M, CF8, WCB, GGG40
Disc material: F55, F53, 2205, SS310, SS316L, SS316, SS304
Sealing material: NBR, EPDM, FKM, PU
Packing: Aramid fiber, high-water based fiber, rubber, PTFE
Applicable medium: Suitable for solid media such as mud, urban sewage treatment, sugar factories, papermaking, pharmaceuticals, chemical products and other oils.

QMB 系列 Series 可更换式U型橡胶双向密封刀闸阀
Replaceable U-shaped rubber bidirectional sealing knife gate valve

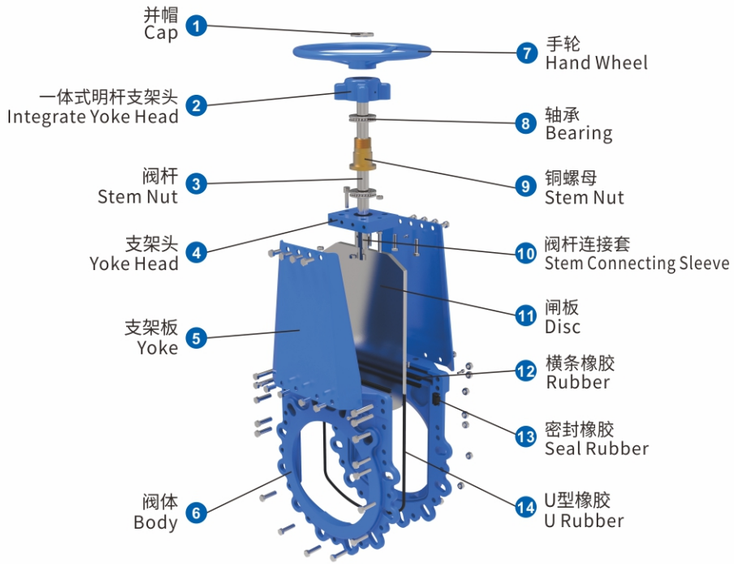

型号： QMBZ73X
工作压力： DN50-DN200 2.0Mpa
DN250-DN600 1.2Mpa
DN650-DN700 1.0Mpa
DN750-DN1000 0.6Mpa
DN1200-DN2000 0.4Mpa
连接形式： 对夹
设计标准： JB/T8691-2013
法兰标准： GB/T9113.1-2010
ASME B16.5（2"_24"）
ASME B16.47（26"_60"）
AS2129:TABLE D
AS2129:TABLE E
结构长度： GB/T15188.2-94 chart6-7
检验标准： GB/T13927-2008
开关形式： 手轮，涡轮，气动，电装，液动，电液动，链轮盘，杠杆
阀体材质： F55, F53, 2205, CF3M, CF8M, CF8, WCB, GGG40
闸板材质： F55, F53, 2205, SS310, SS316L, SS316, SS304
密封材质： NBR, EPDM, FKM
填料： 芳纶，高水基，四氟，橡胶
适用介质： 适用于泥浆、城市污水处理、糖厂、造纸、医药、化工等油品，等固体介质。

Model: QMBZ73X
Working Pressure: DN50-DN200 20bar
DN250-DN600 12bar
DN650-DN700 10bar
DN750-DN1000 6bar
DN1200-DN2000 4bar
Type: Wafer
Design Standard: MSS SP-81
Flange Standard: DIN PN10,PN16,150LB ,JIS 10K, TABLE E/D
Face to Face: MSS SP-81
Testing Standard: API-598
Operation: handwheel, electric, pneumatic, hydraulic, sprocket, electro-hydraulic, gear, lever
Main material: F55, F53, 2205, CF3M, CF8M, CF8, WCB, GGG40
Disc material: F55, F53, 2205, SS310, SS316L, SS316, SS304
Sealing material: NBR, EPDM, FKM
Packing: Aramid fiber, high-water based fiber, rubber, PTFE
Applicable medium: Applicable for coal in power plant,slag discharge, sewage treatment, food, paper making, medicine, petroleum and chemical industry, water, Oil, steam, connecting or cutting grout, gold powder, ores, slag, coal, pulp, wood pulp, tailings, fibers, dust, chemicals, sewage treatment, sedimentation tanks, asphalt, bunker export, cereals, slaughter plant waste and other media.

QMG 系列 Series 分体式双向带U型调节型密封刀闸阀
Bidirectional seal with U - type and adjustable knife gate valve

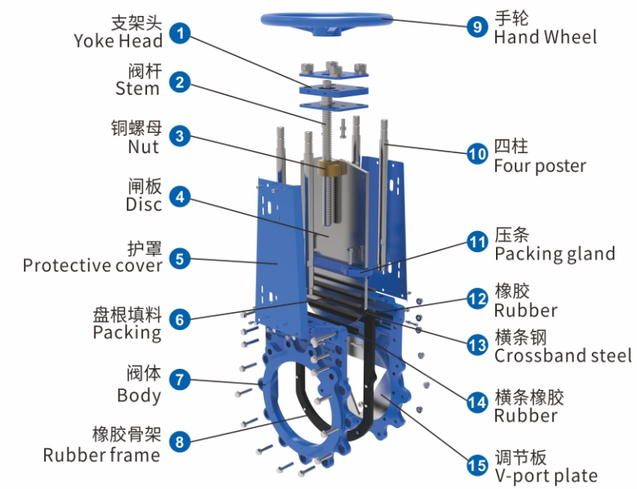

型号： QMGZ73X
工作压力： DN50-DN150 1.6Mpa
DN200-DN450 1.0Mpa
DN500-DN600 0.8Mpa
连接形式： 对夹，尾部
设计标准： JB/T8691-2013, MSS SP.81
法兰标准： GB/T9113.1-2010
ASME B16.5（2"_24"）
ASME B16.47（26"_60"）
AS2129:TABLE D
AS2129:TABLE E
结构长度： GB/T15188.2-94 chart6-7
检验标准： GB/T13927-2008
开关形式： 手轮，电动，气动，液动，伞齿轮
阀体材质： Q235, SS304, SS316L
闸板材质： GGG40 , CF8 , CF3M
密封材质： NBR,EPDM,FKM
填料： PTFE
适用介质： 含氨碱性溶液，NaCL，NaHCO2，海水，碳乳（含固体颗粒）、浆液、泥浆、空气、污水、油品。

Model: QMGZ73X
Working Pressure: DN50-DN150 16bar
DN200-DN450 10bar
DN500-DN600 8bar
Type: Wafer, End
Design Standard: MSS SP-81
Flange Standard: DIN PN10,PN16,150LB ,JIS 10K,TABLE E/D
Face to Face: MSS SP-81
Testing Standard: API-598
Operation: handwheel, electric, pneumatic, hydraulic, gear
Main material: Q235, SS304, SS316L
Disc material: GGG40 , CF8 , CF3M
Sealing material: NBR,EPDM,FKM
Packing: PTFE
Applicable medium: Alkaline solution containing ammonia, seawater, carbon emulsion (containing solid particles), slurry, mud, air, sewage, oil

QP 系列 Series 分体式双向无凹槽耐磨刀闸阀
Bi-directional seal Polyurethane lined Knife Gate Valve

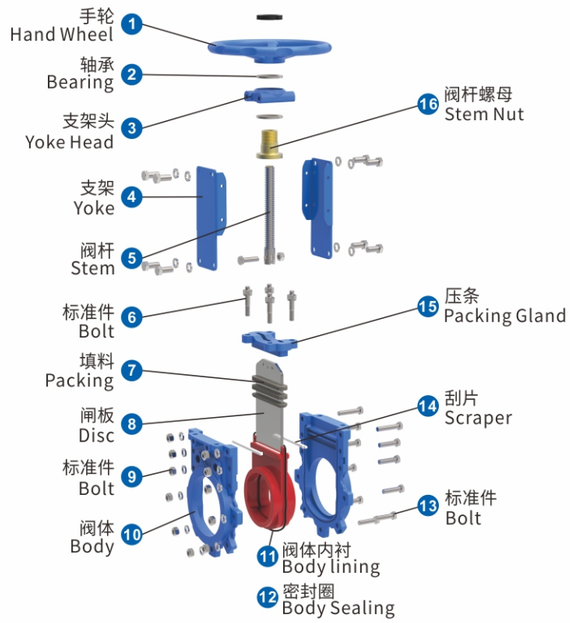

型号： QPZ73X
工作压力： DN50-DN200 1.6Mpa
DN250-DN600 1.0Mpa
DN650-DN700 0.8Mpa
连接形式： 对夹
设计标准： JB/T8691-2013
法兰标准： GB/T9113.1-2010
ASME B16.5（2"_24"）
ASME B16.47（26"_60"）
AS2129:TABLE D
AS2129:TABLE E
结构长度： GB/T15188.2-94 chart6-7
检验标准： GB/T13927-2008
开关形式： 手轮，涡轮，气动，电装，液动，电液动，链轮盘，杠杆
阀体材质： F55, F53, 2205, CF3M, CF8M, CF8, WCB, GGG40
闸板材质： F55,F53,2205,SS310,SS316L,SS316, SS304
密封材质： 改良型聚氨酯
填料： 芳纶，高水基，四氟，橡胶
适用介质： 适用于泥浆、矿浆，城市污水处理、糖厂、粉体、造纸、医药、化工等领域。

Model: QPZ73X
Working Pressure: DN50-DN200 16bar
DN250-DN600 10bar
DN650-DN700 8bar
Type: Wafer
Design Standard: MSS SP-81
Flange Standard: DIN PN10,PN16,150LB ,JIS10K, TABLE E/D
Face to Face: MSS SP-81
Testing Standard: API-598
Operation: handwheel, electric, pneumatic, hydraulic, sprocket, electro-hydraulic, gear box, lever
Main material: F55, F53, 2205, CF3M, CF8M, CF8, WCB, GGG40
Disc material: F55, F53, 2205, SS310, SS316L, SS316, SS304
Sealing material: Polyurethane
Packing: Aramid fiber, high-water based fiber, rubber, PTFE
Applicable medium: Applicable for coal in power plant, slag discharge, sewage treatment, food, paper making, medicine, petroleum and chemical industry, water, Oil, steam, connecting or cutting grout, gold powder, ores, slag, coal, pulp, wood pulp, tailings, fibers, dust, chemicals, sewage treatment, sedimentation tanks, asphalt, bunker export, cereals, slaughter plant waste and other media.

QP 系列 Series 可更换式PU内衬件双向密封耐磨刀闸阀
Replaceable PU lining bidirectional sealing wear-resistant knife gate valve

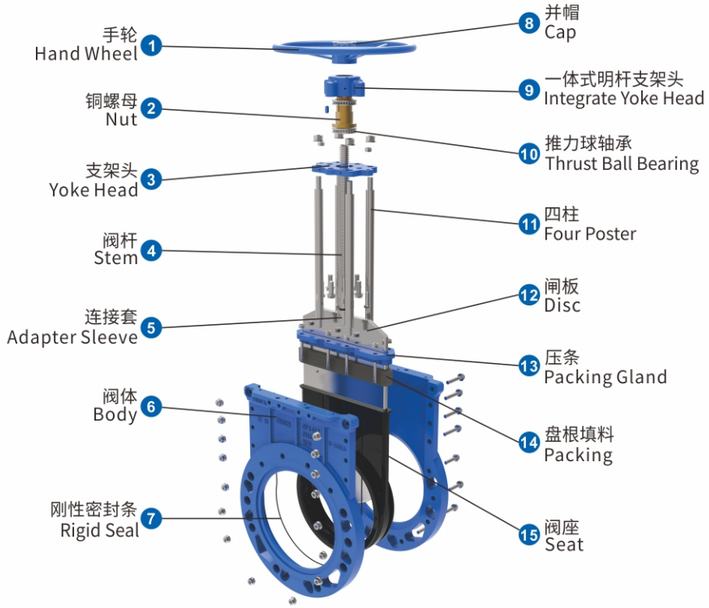

型号： QPZ73X
工作压力： DN50-DN100 2.2Mpa
DN125-DN150 2.0Mpa
DN200-DN300 1.6Mpa
DN350-DN400 1.2Mpa
DN450-DN600 1.0Mpa
连接形式： 对夹
设计标准： JB/T8691-2013
法兰标准： GB/T9113.1-2010
ASME B16.5（2"_24"）
ASME B16.47（26"_60"）
AS2129:TABLE D
AS2129:TABLE E
结构长度： GB/T15188.2-94 chart6-7
检验标准： GB/T13927-2008
开关形式： 手轮，涡轮，气动，电装，液动，电液动，链轮盘，杠杆
阀体材质： F55, F53, 2205, CF3M, CF8M, CF8, WCB, GGG40
闸板材质： F55,F53,2205,SS310,SS316L,SS316, SS304
密封材质： 改良型聚氨酯
填料： 芳纶，高水基，四氟，橡胶
适用介质： 适用于泥浆、矿浆，城市污水处理、糖厂、粉体、造纸、医药、化工等领域。

Model: QPZ73X
Working Pressure: DN50-DN100 22bar
DN125-DN150 20bar
DN200-DN300 16bar
DN350-DN400 12bar
DN450-DN600 10bar
Type: Wafer
Design Standard: MSS SP-81
Flange Standard: DIN PN10,PN16,150LB ,JIS10K, TABLE E/D
Face to Face: MSS SP-81
Testing Standard: API-598
Operation: handwheel, electric, pneumatic, hydraulic, sprocket, electro-hydraulic, gear box, lever
Main material: F55, F53, 2205, CF3M, CF8M, CF8, WCB, GGG40
Disc material: F55, F53, 2205, SS310, SS316L, SS316, SS304
Sealing material: Polyurethane
Packing: Aramid fiber, high-water based fiber, rubber, PTFE
Applicable medium: Suitable for mud, slurry, urban sewage treatment, sugar factories, powders, papermaking, pharmaceuticals, chemical industry and other fields.

QP 系列 Series 可更换式PU内衬件双向密封耐磨刀闸阀
Replaceable PU lining bidirectional sealing wear-resistant knife gate valve

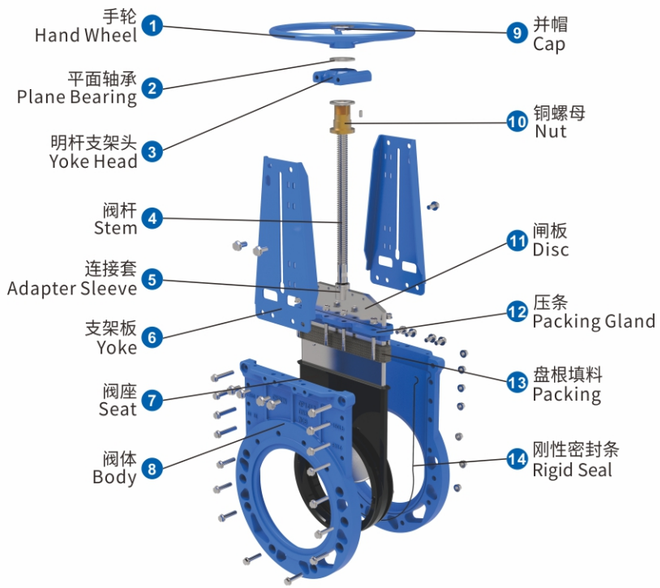

型号： QPZ73X
工作压力： DN50-DN100 2.0Mpa
DN125-DN150 1.6Mpa
DN200-DN300 1.5Mpa
DN350-DN400 1.2Mpa
DN450-DN600 1.0Mpa
连接形式： 对夹
设计标准： JB/T8691-2013
法兰标准： GB/T9113.1-2010
ASME B16.5(2"_24")
ASME B16.47(26"_60")
AS2129:TABLE D
AS2129:TABLE E
结构长度： GB/T15188.2-94 chart6-7
检验标准： GB/T13927-2008
开关形式： 手轮，涡轮，气动，电装，液动，电液动，链轮盘，杠杆
阀体材质： F55, F53, 2205, CF3M, CF8M, CF8, WCB, GGG40
闸板材质： F55,F53,2205,SS310,SS316L,SS316, SS304
密封材质： 改良型聚氨酯
填料： 芳纶，高水基，四氟，橡胶
适用介质： 适用于泥浆、矿浆，城市污水处理、糖厂、粉体、造纸、医药、化工等领域。

Model: QPZ73X
Working Pressure: DN50-DN100 20bar
DN125-DN150 16bar
DN200-DN300 15bar
DN350-DN400 12bar
DN450-DN600 10bar
Type: Wafer
Design Standard: MSS SP-81
Flange Standard: DIN PN10,PN16,150LB ,JIS10K, TABLE E/D
Face to Face: MSS SP-81
Testing Standard: API-598
Operation: handwheel, electric, pneumatic, hydraulic, sprocket, electro-hydraulic, gear box, lever
Main material: F55, F53, 2205, CF3M, CF8M, CF8, WCB, GGG40
Disc material: F55, F53, 2205, SS310, SS316L, SS316, SS304
Sealing material: Polyurethane
Packing: Aramid fiber, high-water based fiber, rubber, PTFE
Applicable medium: Suitable for mud, slurry, urban sewage treatment, sugar factories, powders, papermaking, pharmaceuticals, chemical industry and other fields.

QS 系列 Series 整体式双向无凹槽耐磨刀闸阀
Bi-directional Knife Gate Valve Grooveless Wear-Resistant Special for Mining

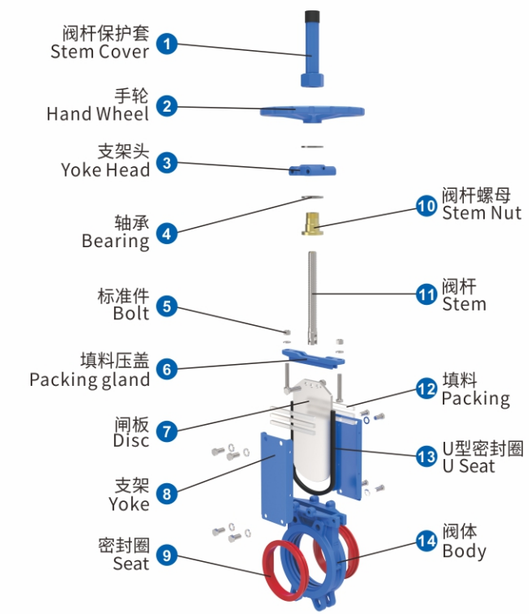

型号： QSZ73X
工作压力： DN50-DN100 1.0Mpa
DN125-DN200 0.8Mpa
DN250 0.5Mpa
连接形式： 对夹
设计标准： JB/T8691-2013
法兰标准： GB/T9113.1-2010
ASME B16.5(2"_24")
ASME B16.47(26"_60")
AS2129:TABLE D
AS2129:TABLE E
结构长度： GB/T15188.2-94 chart6-7
检验标准： GB/T13927-2008
开关形式： 手轮，涡轮，气动，电装，液动，电液动，链轮盘
阀体材质： GGG40
闸板材质： SS316L, SS304
密封材质： PU
填料： 芳纶，高水基，四氟，橡胶
适用介质： 适用于泥浆、城市污水处理、糖厂、粉体、造纸、医药、化工、食品等领域。

Model: QSZ73X
Working Pressure: DN50-DN100 10bar
DN125-DN200 8bar
DN250 5bar
Type: Wafer
Design Standard: MSS SP-81
Flange Standard: PN10/PN16 150LB TE TD
Face to Face: MSS SP-81
Testing Standard: API-598
Operation: handwheel, electric, pneumatic, hydraulic, sprocket, electro-hydraulic, gear
Main material: GGG40
Disc material: SS316L,SS304
Sealing material: PU
Packing: Aramid fiber, high-water based fiber, rubber, PTFE
Applicable medium: Applicable for coal in power plant, slag discharge, sewage treatment, food, paper making, medicine, petroleum and chemical industry, water, Oil, steam, connecting or cutting grout, gold powder, ores, slag, coal, pulp, wood pulp, tailings, fibers, dust, chemicals, sewage treatment, sedimentation tanks, asphalt, bunker export, fruit juices, cereals, slaughter plant waste and other media.

QU 系列 Series 整体式双向无凹槽刀闸阀
Bi-directional seal Knife Gate Valve

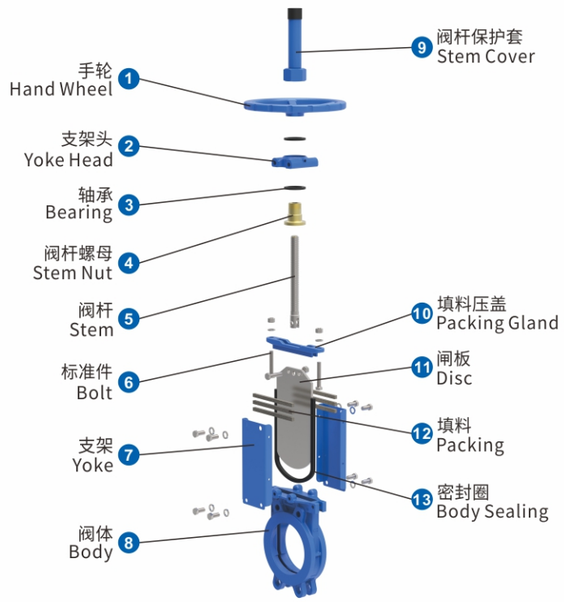

型号： QUZ73X
工作压力： DN50-DN100 1.6Mpa DN650-DN750 0.4Mpa
DN125-DN200 1.0Mpa DN800-DN900 0.3Mpa
DN250-DN400 0.7Mpa DN1000 0.2Mpa
DN450-DN600 0.5Mpa DN1100-DN1200 0.1Mpa
连接形式： 对夹
设计标准： JB/T8691-2013
法兰标准： GB/T9113.1-2010
ASME B16.5 (2"_24")
ASME B16.47 (26"_60")
AS2129:TABLE D
AS2129:TABLE E
结构长度： GB/T15188.2-94 chart6-7
检验标准： GB/T13927-2008
开关形式： 手轮，涡轮，气动，电装，液动，电液动，链轮盘，杠杆
阀体材质： GGG40
闸板材质： SS316L,SS304
密封材质： NBR, EPDM
填料： 芳纶，高水基，四氟，橡胶
适用介质： 适用于泥浆、城市污水处理、糖厂、粉体、造纸、医药、化工、食品等领域。

Model: QUZ73X
Working Pressure: DN50-DN100 16bar DN650-DN750 4bar
DN125-DN200 10bar DN800-DN900 3bar
DN250-DN400 7bar DN1000 2bar
DN450-DN600 5bar DN1100-DN1200 1bar
Type: Wafer
Design Standard: MSS SP-81
Flange Standard: DIN PN10,PN16,150LB ,JIS10K, TABLE E/D
Face to Face: MSS SP-81
Testing Standard: API-598
Operation: handwheel,gear box,electric,pneumatic,hydraulic, sprocket, lever
Main material: GGG40
Disc material: SS316L,SS304
Sealing material: NBR, EPDM
Packing: Aramid fiber, high-water based fiber, rubber, graphite
Applicable medium: Applicable for coal in power plant, slag discharge, sewage treatment, food, paper making, medicine, petroleum and chemical industry, water, Oil, steam, connecting or cutting grout, gold powder, ores, slag, coal,pulp, wood pulp, tailings, fibers, dust, chemicals, sewage treatment, sedimentation tanks, asphalt, bunker export, fruit juices, cereals, slaughter plant waste and other media.

QUP 系列 Series 整体式双向无凹槽刀闸阀
Bi-directional seal Knife Gate Valve

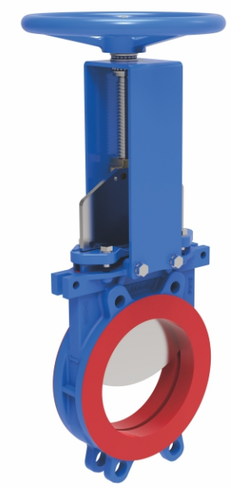

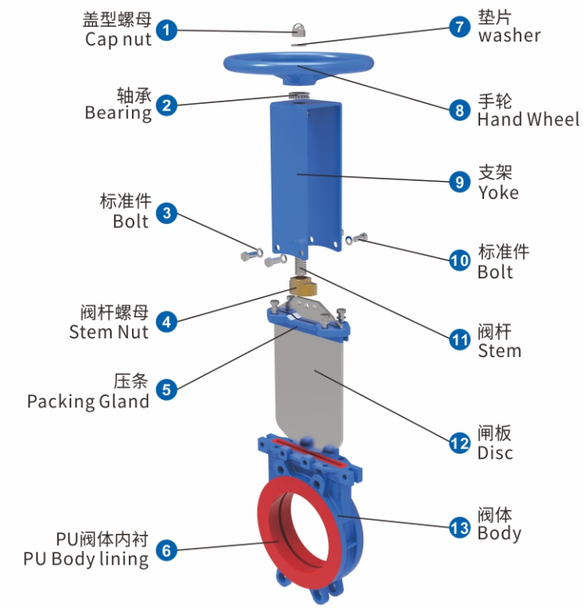

型号： QUPZ73PU
工作压力： DN50-DN100 1.6Mpa DN650-DN750 0.4Mpa
DN125-DN200 1.0Mpa DN800-DN900 0.3Mpa
DN250-DN400 0.7Mpa DN1000 0.2Mpa
DN450-DN600 0.5Mpa DN1100-DN1200 0.1Mpa
连接形式： 对夹
设计标准： JB/T8691-2013
法兰标准： GB/T9113.1-2010
ASME B16.5 (2"_24")
ASME B16.47 (26"_60")
AS2129:TABLE D
AS2129:TABLE E
结构长度： GB/T15188.2-94 chart6-7
检验标准： GB/T13927-2008
开关形式： 手轮，涡轮，气动，电装，液动，电液动，链轮盘，杠杆
阀体材质： GGG40
闸板材质： SS316L,SS304
密封材质： PU
填料： 芳纶，高水基，四氟
适用介质： 适用于矿浆、铜矿、铁矿、金矿等领域。

Model: QUPZ73PU
Working Pressure: DN50-DN100 16bar DN650-DN750 4bar
DN125-DN200 10bar DN800-DN900 3bar
DN250-DN400 7bar DN1000 2bar
DN450-DN600 5bar DN1100-DN1200 1bar
Type: Wafer
Design Standard: MSS SP-81
Flange Standard: DIN PN10,PN16,150LB ,JIS10K, TABLE E/D
Face to Face: MSS SP-81
Testing Standard: API-598
Operation: handwheel,gear box,electric,pneumatic,hydraulic, sprocket, lever
Main material: GGG40
Disc material: SS316L,SS304
Sealing material: PU
Packing: Aramid fiber, high-water based fiber, PTFE
Applicable medium: Suitable for fields such as mineral slurry, copper ore, iron ore, gold ore, etc.

QW 系列 Series 双向自密封刀闸阀
Bi-directional Self Sealing Knife Gate Valve

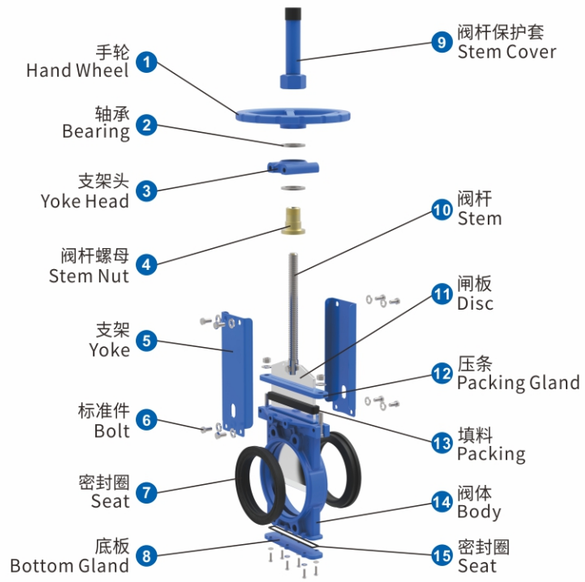

型号： QWZ73X
工作压力： DN50-DN100 1.6Mpa
DN125-DN200 1.0Mpa
DN250-DN400 0.7Mpa
DN450-DN500 0.5Mpa
DN600-DN700 0.3Mpa
DN800 0.2Mpa
连接形式： 对夹
设计标准： JB/T8691-2013
法兰标准： GB/T9113.1-2010
ASME B16.5 (2"_24")
ASME B16.47 (26"_60")
AS2129:TABLE D
AS2129:TABLE E
结构长度： GB/T15188.2-94 chart6-7
检验标准： GB/T13927-2008
开关形式： 手轮，涡轮，气动，电装，液动，电液动，链轮盘，杠杆
阀体材质： GGG40
闸板材质： F55, F53, 2205, SS310, SS316L, SS316, SS304
密封材质： NR
填料： 芳纶，高水基，四氟，橡胶
适用介质： 适用于矿山管路中的水泥浆、矿砂浆、炉渣浆、煤泥浆、纸浆、泥浆、尾矿浆、纤维浆、沉淀池浆、等介质。

Model: QWZ73X
Working Pressure: DN50-DN100 16bar
DN125-DN200 10bar
DN250-DN400 7bar
DN450-DN500 5bar
DN600-DN700 3bar
DN800 2bar
Type: Wafer
Design Standard: MSS SP-81
Flange Standard: DIN PN10,PN16,150LB,JIS 10K, TABLE E/D
Face to Face: MSS SP-81
Testing Standard: API-598
Operation: handwheel, electric, pneumatic, hydraulic, sprocket, electro-hydraulic, gear, lever
Main material: GGG40
Disc material: F55, F53, 2205, SS310, SS316L, SS316, SS304
Sealing material: NR
Packing: Aramid fiber, high-water based fiber, rubber, PTFE
Applicable medium: Applicable to slurry, urban sewage treatment, sugar, powder, paper, medicine, chemicals, food and other fields.

QWF 系列 Series 双向自密封刀闸阀
Bi-directional Self Sealing Knife Gate Valve

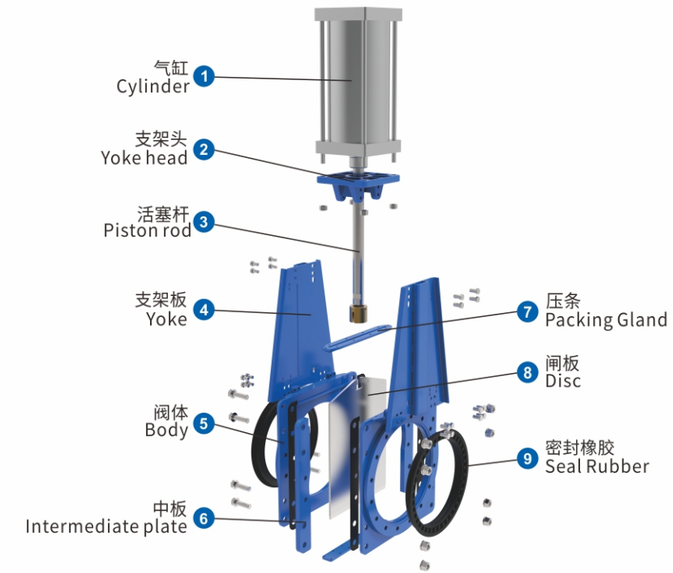

型号： QWFZ43X
工作压力： DN50-DN100 1.6Mpa
DN125-DN200 1.0Mpa
DN250-DN400 0.7Mpa
DN450-DN500 0.5Mpa
DN600-DN700 0.3Mpa
DN800 0.2Mpa
连接形式： 法兰
设计标准： JB/T8691-2013, MSS SP.81
法兰标准： GB/T9113.1-2010
ASME B16.5 (2"_24")
ASME B16.47 (26"_60")
AS2129:TABLE D
AS2129:TABLE E
结构长度： GB/T15188.2-94,J21,J22,MSS.SP.81
检验标准： GB/T13927-2022, API598-2016
开关形式： 手轮，伞齿轮，气动，电动，液动，电液动
阀体材质： Q235,SS304,SS316L,321,2507,2205
闸板材质： SS304, SS316L,321,2507,2205
密封材质： NBR, EPDM,FKM,NR,PU
填料： 芳纶，高水基，四氟
适用介质： 矿浆、泥浆

Model: QWFZ43X
Working Pressure: DN50-DN100 16bar
DN125-DN200 10bar
DN250-DN400 7bar
DN450-DN500 5bar
DN600-DN700 3bar
Dn800 2bar
Type: Flange
Design Standard: JB/T8691-2013, MSS SP.81
Flange Standard: DIN PN10,PN16,150LB ,JIS 10K,TABLE E/D
Face to Face: GB/T15188.2-94,J21,J22,MSS.SP.81
Testing Standard: GB/T13927-2022, API598-2016
Operation: handwheel, electric, pneumatic, hydraulic, electro-hydraulic,gear
Main material: Q235,SS304,SS316L,321,2507,2205
Disc material: SS304, SS316L,321,2507,2205
Sealing material: NBR, EPDM,FKM,NR,PU
Packing: Aramid fiber, high-water based fiber, PTFE
Applicable medium: pulp,slurry

QWL 系列 Series 双向自密封刀闸阀 Bi-directional Self Sealing Knife Gate Valve

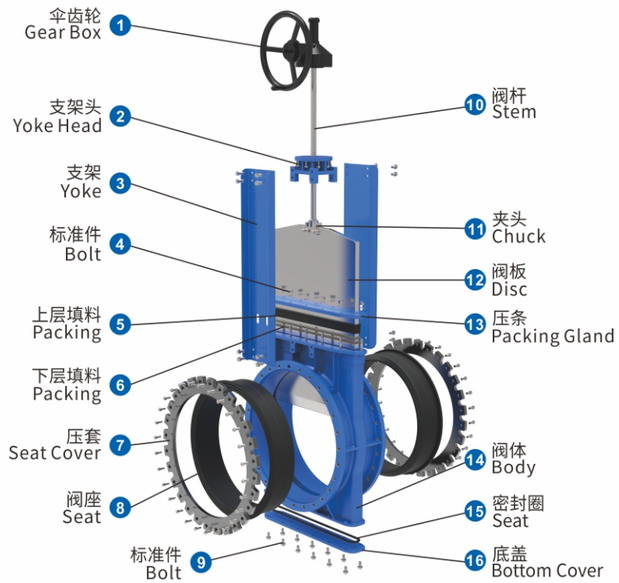

型号： QWLZ53X
工作压力： DN50-DN100 2.0Mpa
DN125-DN200 1.6Mpa
DN250-DN1000 1.0Mpa
DN1100-DN1400 0.6Mpa
连接形式： 梅花
设计标准： JB/T8691-2013
法兰标准： GB/T9113.1-2010
ASME B16.5 (2"_24")
ASME B16.47 (26"_60")
AS2129:TABLE D
AS2129:TABLE E
结构长度： GB/T15188.2-94 chart6-7
检验标准： GB/T13927-2008
开关形式： 手轮，涡轮，气动，电装，液动，电液动，链轮盘
阀体材质： F55, F53, 2205, CF3M, CF8M, CF8, WCB, GGG40
闸板材质： F55, F53,2205, SS310, SS316L,SS316, SS304
密封材质： NBR,EPDM,NR,PU
填料： 芳纶，高水基，四氟，橡胶，石墨
适用介质： 适用于泥浆、城市污水处理、粉体、造纸、化工、等领域。

Model: QWLZ53X
Working Pressure: DN50-DN100 20bar
DN125-DN200 16bar
DN250-DN1000 10bar
DN1000-DN1400 6bar
Type: Lug
Design Standard: MSS SP-81
Flange Standard: DIN PN10,PN16,150LB ,JIS 10K,TABLE E/D
Face to Face: MSS SP-81
Testing Standard: API-598
Operation: handwheel, electric, pneumatic, hydraulic, sprocket, electro-hydraulic,gear
Main material: F55, F53, 2205, CF3M, CF8M, CF8, WCB, GGG40
Disc material: F55,F53,2205,SS310,SS316L,SS316,SS304
Sealing material: NBR,EPDM,NR,PU
Packing: Aramid fiber, high-water based fiber,rubber, PTFE, graphite
Applicable medium: Applicable to slurry, urban sewage treatment, powder, paper, chemicals, and other fields.

QWL 系列 Series 双向自密封刀闸阀 Bi-directional Self Sealing Knife Gate Valve

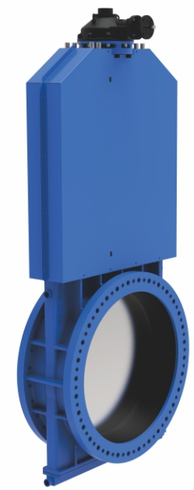

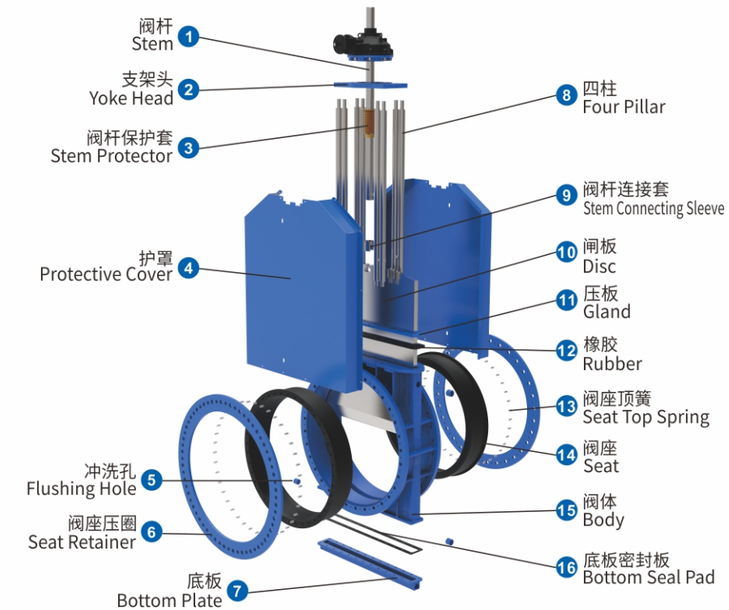

型号： QWLZ53X
工作压力： DN50-DN100 2.0Mpa
DN125-DN200 2.0Mpa
DN250-DN500 1.6Mpa
DN550-DN1000 1.0Mpa
DN1100-DN1400 0.6Mpa
连接形式： 法兰
设计标准： JB/T8691-2013
法兰标准： GB/T9113.1-2010
ASME B16.5 (2"_24")
ASME B16.47 (26"_60")
AS2129:TABLE D
AS2129:TABLE E
结构长度： GB/T15188.2-94 chart6-7
检验标准： GB/T13927-2008
开关形式： 手轮，涡轮，气动，电装，液动，电液动，链轮盘
阀体材质： F55, F53, 2205, CF3M, CF8M, CF8, WCB, GGG40
闸板材质： F55, F53,2205, SS310, SS316L,SS316, SS304
密封材质： NBR,EPDM,NR,PU
填料： 芳纶，高水基，四氟，橡胶，石墨
适用介质： 适用于泥浆、城市污水处理、粉体、造纸、化工、等领域。

Model: QWLZ53X
Working Pressure: DN50-DN100 20bar
DN125-DN200 20bar
DN250-DN500 16bar
DN550-DN1000 10bar
DN1100-DN1400 6bar
Type: Flange
Design Standard: MSS SP-81
Flange Standard: DIN PN10,PN16,150LB ,JIS 10K,TABLE E/D
Face to Face: MSS SP-81
Testing Standard: API-598
Operation: handwheel, electric, pneumatic, hydraulic, sprocket, electro-hydraulic,gear
Main material: F55, F53, 2205, CF3M, CF8M, CF8, WCB, GGG40
Disc material: F55,F53,2205,SS310,SS316L,SS316,SS304
Sealing material: NBR,EPDM,NR,PU
Packing: Aramid fiber, high-water based fiber,rubber, PTFE, graphite
Applicable medium: Applicable to slurry, urban sewage treatment, powder, paper, chemicals, and other fields.

QWLY系列 Series 全封闭高压双向耐磨刀闸阀
Fully closed high pressure bidirectional seal wear-resistant knife gate valve

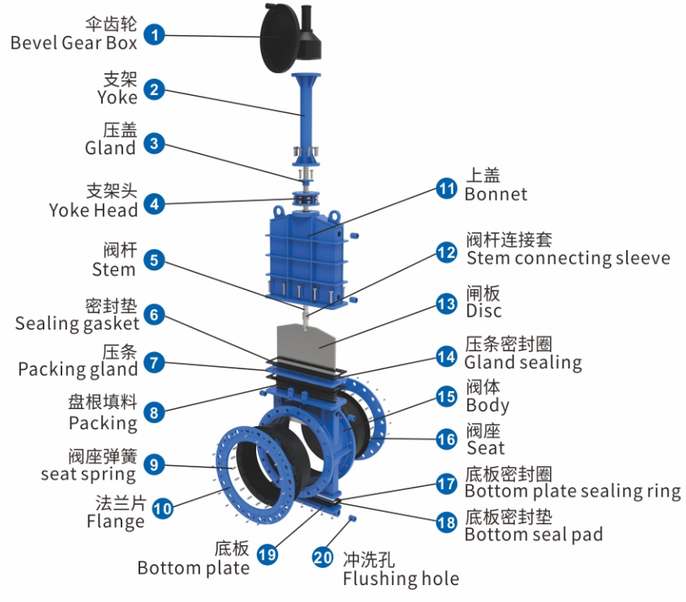

型号： QWLYZ43X
工作压力： DN150-DN400 2.5Mpa
DN450-DN600 1.6Mpa
连接形式： 法兰
设计标准： JB/T8691-2013, MSS SP.81
法兰标准： GB/T9124.2-2019, PN16,PN25
结构长度： GB/T15188.2-94 chart6-7
检验标准： GB/T13927-2008
开关形式： 手轮，电动，气动，液动，伞齿轮
阀体材质： WCB, GG40, CF8, CF8M, CF3M
闸板材质： SS304, SS316L, F53, F55
密封材质： PU, EPDM, NR
填料： PTFE，石墨
适用介质： 矿浆（铜，铁，金矿浆）。

Model: QWLYZ43X
Working Pressure: DN150-DN400 25bar
DN450-DN600 16bar
Type: Flange
Design Standard: MSS SP-81
Flange Standard: DIN PN10,PN16,150LB ,JIS 10K,TABLE E/D
Face to Face: MSS SP-81
Testing Standard: API-598
Operation: handwheel, electric, pneumatic, hydraulic, gear
Main material: WCB, GG40, CF8, CF8M, CF3M
Disc material: SS304, SS316L, F53, F55
Sealing material: PU, EPDM, NR
Packing: PTFE, graphite
Applicable medium: Ore pulp (copper, iron, gold)

QWY系列 Series 双向密封刀闸阀
Bi-directional seal Knife Gate Valve

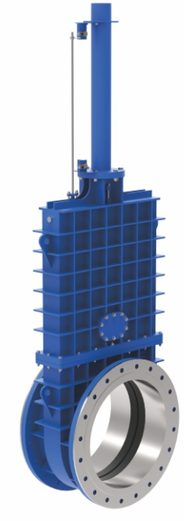

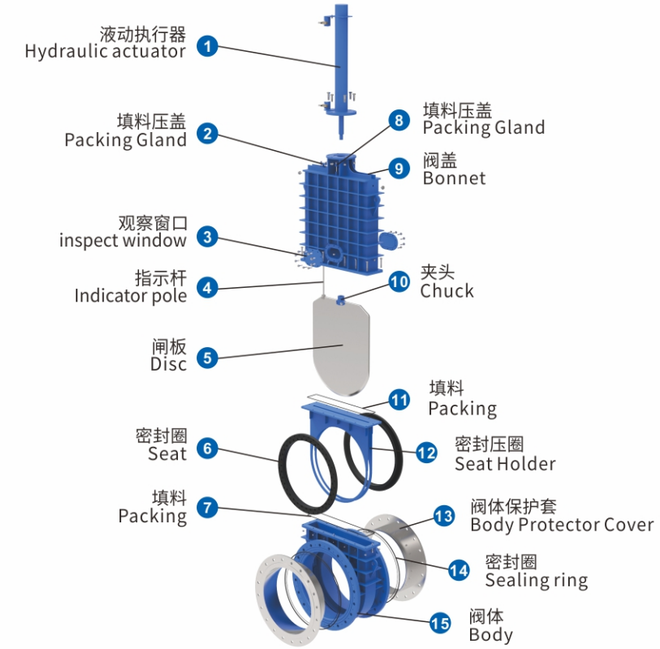

型号： QWYZ43X
工作压力： DN300-DN500 2.0Mpa
DN550-DN800 1.6Mpa
DN850-DN1000 1.2Mpa
DN1100-DN2000 0.8Mpa
连接形式： 对夹，梅花
设计标准： JB/T8691-2013
法兰标准： GB/T9113.1-2010
ASME B16.5（2"_24"）
ASME B16.47（26"_60"）
AS2129:TABLE D
AS2129:TABLE E
结构长度： GB/T15188.2-94 chart6-7
检验标准： GB/T13927-2008
开关形式： 手轮，电动，气动，液动，链轮，电液动，伞齿轮
阀体材质： F55, F53, 2205, CF3M, CF8M, CF8, WCB, GGG40
闸板材质： F55,F53,2205,SS310,SS316L,SS316, SS304
密封材质： NBR,EPDM,NR,PU
填料： 芳纶，高水基，四氟，橡胶
适用介质： 适用于淤泥船，绞吸船，泥浆等。

Model: QWYZ43X
Working Pressure: DN300-DN500 20bar
DN550-DN800 16bar
DN850-DN1000 12bar
DN1100-DN2000 8bar
Type: Wafer，Lug
Design Standard: MSS SP-81
Flange Standard: DIN PN10,PN16,150LB ,JIS 10K,TABLE E/D
Face to Face: MSS SP-81
Testing Standard: API-598
Operation: handwheel, electric, pneumatic, hydraulic, sprocket, electro-hydraulic,gear
Main material: F55, F53, 2205, CF3M, CF8M, CF8, WCB, GGG40
Disc material: F55, F53,2205, SS310, SS316L,SS316, SS304
Sealing material: NBR,EPDM,NR,PU
Packing: Aramid fiber, high-water based fiber, rubber, PTFE
Applicable medium: Applicable to Silt dredger, cutter suction dredger, mud.